Publication No. ZZ 1126-9
May 2011

ECONOMAIRE 50

WARM AIR HEATER
with ***Intejan Water Circulator***

CE

INSTALLATION, COMMISSIONING & SERVICING INSTRUCTIONS

G.C. NUMBERS: Air Heater 42-416-17
Water Circulator 53-416-34

These instructions are to be left with the User or adjacent to the Gas Meter

www.johnsonandstarley.co.uk

RELIABILITY YOU CAN TRUST

Johnson & Starley

CONTENTS

	The Benchmark Scheme	2
1	Features	3
2	Brief Description	3
3	Important Information	3
4	Technical Data	4
5	Heater Compartment & Clearances	4
6	Ventilation Air	5
7	Duct System	5
8	Flue Instructions	6
9	Electrical	9
10	Gas	9
11	Air Heater Commissioning	9
12	Intejan Circulator	12
13	Intejan Circulator Commissioning	13
14	Users Instructions	14
15	Maintenance	14
16	Defect Diagnosis	18
17	Diagnosis Flow Charts	19
18	Logic Diagram	22
19	Schematic Diagram	23
20	Circuit Diagram	24
21	Dimensions	25
22	List of Spares	26
23	Exploded Diagram	27
24	Economaire Ancillaries	28
25	Benchmark Checklist	29

benchmark
COLLECTIVE MARK
THE MARK OF QUALITY FOR THE INSTALLATION, COMMISSIONING AND SERVICING OF DOMESTIC HEATING AND HOT WATER SYSTEMS

THE BENCHMARK SCHEME

In order to comply with Building Regulations Part L (Part J in Scotland) the boiler MUST be fitted in accordance with the manufacturer's instructions.

Benchmark places responsibilities on both manufacturers and installers. The purpose is to ensure that customers are provided with the correct equipment for their needs, that it is installed, commissioned and serviced in accordance with the manufacturer's instructions by competent persons and that it meets the requirements of the appropriate Building Regulations. The Benchmark Checklist can be used to demonstrate compliance with Building Regulations and should be provided to the customer for future reference.

Installers are required to carry out installation, commissioning and servicing work in accordance with the Benchmark Code of Practice which is available from the Heating and Hotwater Industry Council who manage and promote the Scheme.

Visit www.centralheating.co.uk for more information.

PLEASE READ THESE INSTRUCTIONS CAREFULLY BEFORE STARTING THE INSTALLATION. ON COMPLETION LEAVE THESE INSTRUCTION WITH THE USER OR AT THE GAS METER.

In the interest of continuous development Johnson and Starley reserve the right to change specification without prior notice. Johnson and Starley prides itself on it's ability to supply spare parts quickly and efficiently.
If your service engineer indicates a problem in obtaining a spare part, advise him to contact Johnson and Starley Spares Department.

1. FEATURES

These appliances have been tested and certified by Advantica Technologies for use with natural gas G20.

Note: These instructions have been written to service both the ECONOMAIRE 50 and the ECONOMAIRE 50/INTEJAN. If your heater does not have the intejan circulator fitted, simply ignore the relevant section/s.

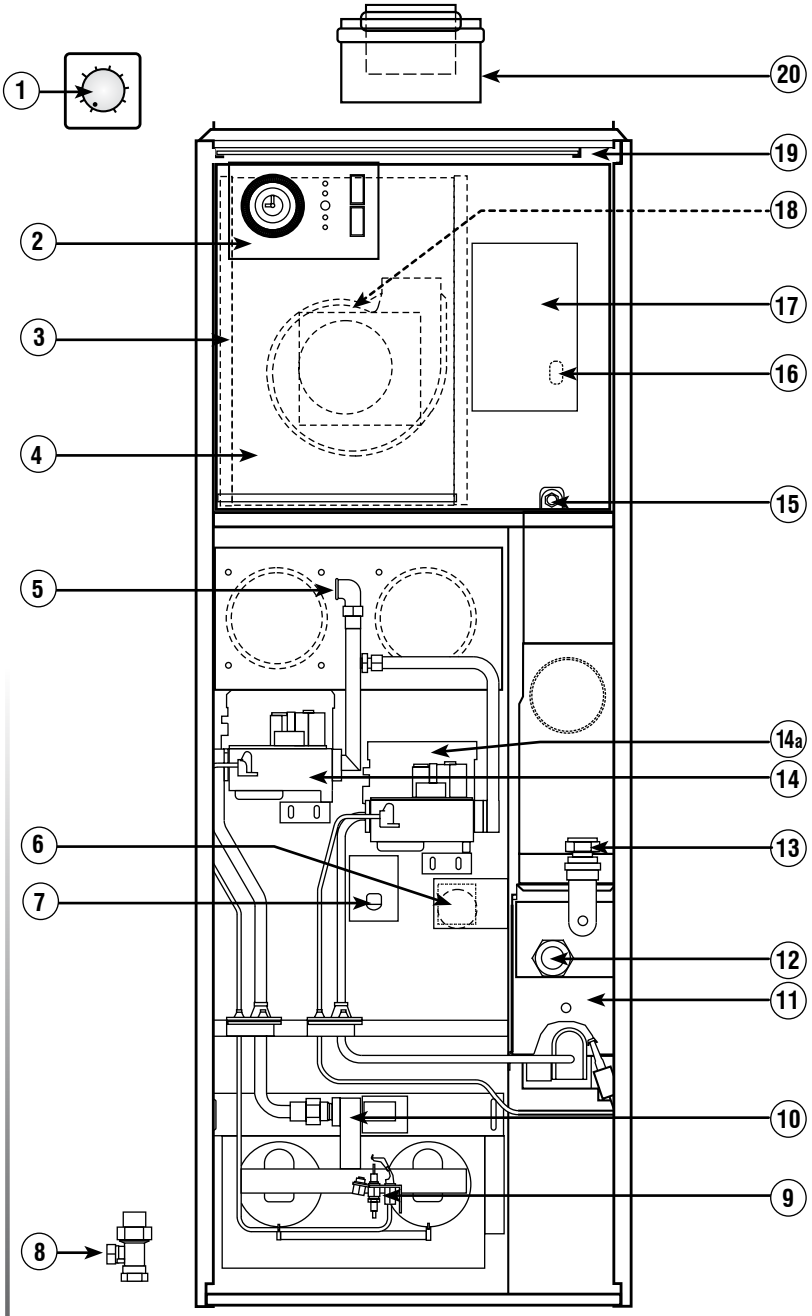

FEATURES

1. Thermista-stat
2. Time Control
3. Air Circulator Fan
4. Circuit Diagram Label
5. Gas Connection
6. Circulator thermostat
7. FDC & Limit Switch
8. Gas Cock
9. Ignition Burner
10. Main Burner Assembly
11. Intejan Circulator
12. Water Return Connection
13. Water Flow Connection

14 Air Heater Multifunction Control

14a. Intejan Multifunction Control (ECONOMAIRE 50 INTEJAN)

15 Flue Gas Test Point

16. LED Diagnostics Indicator
17. Control Module
18. Combustion Air Fan

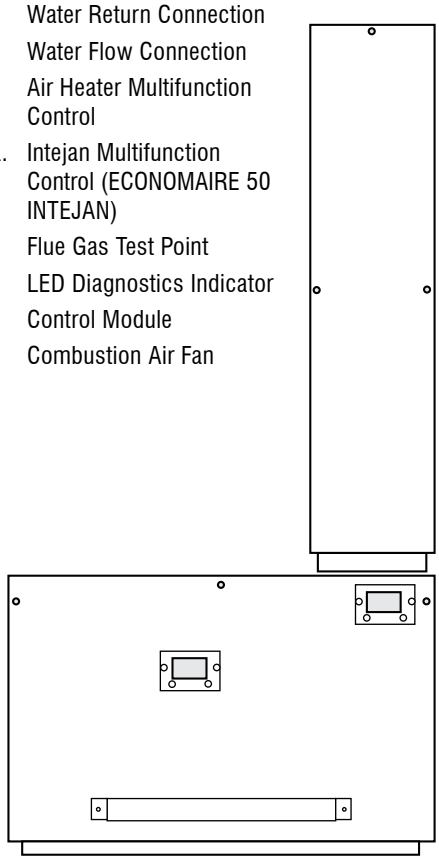

FIGURE 1
ECONOMAIRE 50 FEATURES

2. BRIEF DESCRIPTION

2.1 The ECONOMAIRE 50/INTEJAN is a fan assisted downflow ducted warm air heater, which is fan flued and room sealed. The heater is supplied with digital temperature control (for maximum comfort) and a water circulator is standard on the INTEJAN 50. However, an INTEJAN circulator (retro-fit) kit is available for the ECONOMAIRE 50.

2.2 The air heater output can be adjusted between 11.8kW (42.5MJ/h, 40,235 Btu/h) and 14.75kW (53.1MJ/h, 50,322 Btu/h) “summer air circulation” of unheated air is available by manual selection (see the user’s instructions). INTEJAN output is 3.5kW (12.6MJ/h; 11,900Btu/h).

THIS APPLIANCE CONFORMS TO BS EN 55014

3. IMPORTANT INFORMATION

Installation shall be in accordance with the current editions of:-

Building Standards (Scotland) (Consolidation) Regulations
Building Regulations
Gas Safety (Installation and Use) Regulations (as amended)
BS 7671 Institute of Electrical Engineers (I.E.E.) Wiring Regulations
BS 6891 Installation of Low Pressure Gas Pipework of up to 28mm (R1) in domestic premises (2nd family gases).
BS 5440 Pt.1 (Flues for Gas Appliances)
BS 5440 Pt.2 (Air Supply for Gas Appliances)
BS 5864 Installation of Gas Fired Ducted Air Heaters
British System Design Manual "Gas Fired Warm Air Heating"
Model and Local Authority Bye-laws
BS 5546 Installation of Domestic Hot Water Supplies.

IT IS A STATUTORY REQUIREMENT THAT ALL GAS APPLIANCES MUST BE INSTALLED BY COMPETENT PERSONS, (i.e. GAS SAFE REGISTERED INSTALLERS. GAS SAFE MEMBERSHIP ENQUIRIES - TEL: 0800 408 5500) IN ACCORDANCE WITH THE GAS SAFETY (INSTALLATION AND USE) REGULATIONS (CURRENT EDITION). FAILURE TO COMPLY WITH THESE REGULATIONS MAY LEAD TO PROSECUTION.

4. TECHNICAL DATA

	ECONOMAIRE 50	ECONOMAIRE 50 + INTEJAN WATER CIRCULATOR
WEIGHT	64.5kg	71kg
GAS	G20	
GAS SUPPLY PRESSURE	20mbar	
GA CATEGORY	I 2H	
COUNTRIES OF INSTALLATION	GB & IE	
ELECTRICAL SUPPLY	230V ~ 50Hz fused 5A 180W	
NOX CLASS	1	
MAXIMUM WATER SIDE OPERATING PRESSURE (PMS)	N/A	3 bar
OPEN VENTED SYSTEM	N/A	YES
SEALED SYSTEM	N/A	YES

5. HEATER COMPARTMENT AND CLEARANCES (See BS 5864)

5.1 **IMPORTANT:** If the heater is to be fitted to an existing base duct (warm air plenum), always ensure that installation is carried out such that the rear left hand corner of the heater is aligned with the rear left hand corner of the base duct, so that any overhang or blanking off will be at the front and/or right hand side. In any event, blanking plates must be mechanically secured and all joints sealed.

5.2 When the heater is fitted into a compartment, a minimum clearance from the compartment walls of 25mm (1") at the sides and rear and 25mm (1") at the front must be left. Consideration should also be given to the space required for the removal and replacement of the filter tray and the entry of the gas, water and electrical supplies. If gas and /or water connections are made from a side entry, a minimum clearance of 75mm (3") is required at that side.

5.3 For service access, a minimum of 450mm (18") is required at the front of the heater. Space must also be allowed, in a compartment installation, to permit the removal of the heater. The clearance between the appliance and the compartment should be not less than 75mm (3"). However, if clearances are less than 75mm, the internal surface of the compartment must be lined with non-combustible material and the compartment must be of a fixed rigid structure.

5.4 In airing cupboard installations, the part used as the air heater compartment must comply with the relevant section of BS 5864 and must be completely separated by either a non-combustible partition or a perforated metal partition with the perforations not exceeding 13mm (½"). The secondary flue must be a tight fit where it passes through the partition and must be suitably protected (see BS 5440: Part 1).

5.5 In under-stairs installations, the compartment must comply with the relevant section of BS 5864, provided that in addition all internal surfaces (including the base) are non-combustible or lined with non-combustible material. This requirement is applicable only to dwellings of more than two storeys.

5.6 In slot fit installations (see instructions packed with Slotfit Kit TS50), the slot fit compartment must comply with the relevant section of BS 5864. Side and rear clearances should be not less than 25mm (1in).

Important: Ensure that the rear of the heater is at no time subjected to air pressure subject to leaks from underfloor, joists or roof spaces.

5.7 Where the air heater is to be installed onto a combustible surface and under-floor ducting used, a suitable base tray (BT32) MUST be used in order to provide insulation. NB where a base plenum is used no base tray is required!

6. VENTILATION AIR

6.1 When installed in a compartment two permanent ventilation openings into the compartment are required, one at high level and one at low level. The minimum effective areas specified in Table 1 are related to the rated heat input of the air heater and assume that an INTEJAN circulator is fitted.

7. DUCT SYSTEM

(See British Design Manual - Gas fired Warm Air Heating)

7.1 RETURN AIR

7.1.1 Room-sealed appliances may be installed without return air ducting, provided that the path between the return air grille and the appliance return air inlet is protected in such a manner that the required air-flow will be maintained at all times. The return air grille MUST have a free area of not less than 1195cm^2 (185in^2). It is recommended that the return air duct not be routed directly from the main living area, but from a convenient central area serving the remainder of the dwelling.

7.1.2 The return air system should be constructed of fire-resistant material. The flue shall not be run through an area serving as a return air plenum. It is extremely important that the correct size of return air grilles and ducting is used. For heaters on maximum output the return air duct size should not be less than the equivalent of 300mm x 250mm (12” x 10”). If flexible duct is used the duct diameter should not be less than 350mm (14”) diameter. The return air grille should have a free area of not less than 1266cm^2 (196in^2).

7.1.3 An adequate and unobstructed return air path is essential from areas not served by a directly ducted return and to which warm air is delivered. All such rooms should be fitted with relief grilles which have a free area of 0.0088m^2/kW (1in^2/250Btu/h) of heat supplied to the room. The only exceptions are kitchens, bathrooms and WC.’s.

7.1.4 The return air duct should allow for ease of removal for access to the flue.

7.1.5 All duct work in the room or internal space in which the heater is installed shall be mechanically secured and sealed with ducting tape.

7.2 WARM DELIVERED AIR

7.2.1 All duct work, including riser ducts, should be fully insulated with 50mm (2”) fibreglass or similar. If short extended duct runs are taken below floor level these should be similarly insulated and in addition wrapped with a sound vapour proof barrier. They must also be protected from crushing.

7.2.2 The duct system should be carefully designed (as given in the guidelines in the British System Design Manual) to suit the needs of specific heating requirements and building layout. The type of duct system (e.g. radial/extended plenum/ stepped) should be installed using the least number of fittings to minimise airflow resistance. The base duct, which equalises the air pressure to supply ducts, must be constructed to support the weight of the heater, which must be sealed using self-adhesive foam strip, ducting tape or sealing compound. All ducting and blanking plates must be mechanically secured and sealed.

VENTILATED FROM INSIDE BUILDING	Low level grille 220cm^2 (34.1in^2)
	High level grille 220cm^2 (34.1in^2)
VENTILATED FROM OUTSIDE BUILDING	Low level grille 110cm^2 (17in^2)
	High level grille 110cm^2 (17in^2)

TABLE 1
MINIMUM EFFECTIVE AREAS

8. FLUE INSTRUCTIONS

NOTE: THIS APPLIANCE MUST ONLY BE INSTALLED WITH THE SUPPLIED ACCESSORIES AND TERMINAL.

8.1 FLUES

NOTE: The ECONOMAIRE 50/INTEJAN can be used with horizontal or vertical flue types C12 and C32. You should also consult (or be familiar with) British Standards BS 5440 Pt. 1 Flues

8.1.1 All joints must be soundly sealed.

8.1.2 Sufficient support brackets must be used in order to support the total weight of the flue system.

8.1.3 The flue must conform with Building Regulations and British Gas Materials and Installations specification (3rd edition) regarding clearance and shielding from combustible materials.

8.1.4 The horizontal flue length MUST NOT be less than 300mm plus 90˚ bend and MUST NOT exceed 10m excluding terminal.

8.1.5 The total vertical flue length MUST NOT be less than 1m and MUST NOT exceed 12m excluding terminal.

8.1.6 Total length refers to the equivalent worked flue length and therefore includes bends and NOT the distance from the heater to the flue terminal.

8.1.7 When calculating total flue length, reference MUST be made to the following 'equivalent lengths':

a) 90˚ bend = 2m

b) 45˚ bend = 1m

8.1.8 The maximum number of 90˚ bends that can be used is:

a) Horizontal = 4

b) Vertical = 4

8.1.9 If a 'short flue' is used, the factory fitted flue orifice MUST be left in place (see Figure 4).

8.1.10 'Short flue' refers to a total flue length not exceeding:

a) Horizontal (plus 90˚ bend) = 0.8m

b) Vertical (including terminal) = 5m

8.1.11 Where the total flue length exceeds these lengths, the flue orifice MUST be removed.

8.1.12 The heater is supplied with either a horizontal or vertical flue, dependant upon your specification when ordering. Reference should be made to Table 3 for extra flue/terminal components.

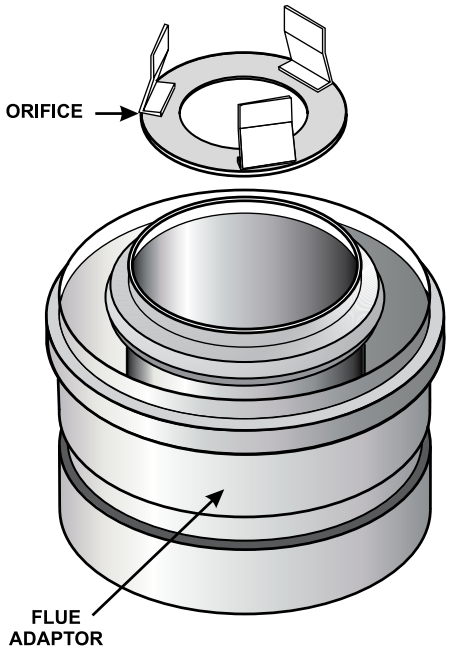

FIGURE 2
FLUE ADAPTOR & ORIFICE

8.2 HORIZONTAL TERMINAL LOCATION

8.2.1 The terminal must be positioned on the outside of the building and allow for the free passage of air across it at ALL times.

8.2.2 Avoid positions where the terminal is adjacent to projections, particularly under a balcony or immediately adjacent to a drain pipe.

8.2.3 The terminal position must ensure that combustion products cannot enter the building in which the heater is installed (or any adjacent building) through windows, doors or by any others means.

8.2.4 Figure 3 shows recommended terminal positions

8.2.5 It is recommended that the flue is fitted so that the outer part is flush with the wall. However, where this is not the case, the maximum protrusion of the outer part of the flue through the wall MUST NOT exceed 22mm (see Figure 4)

8.2.5 If the heater is to be installed in a timber framed building you MUST consult British Gas publication "Guide for Gas Installations in Timber Framed Housing DM2" or your local gas region.

8.2.6 Where the lowest part of the flue terminal is located less than 2 metres above the ground, a balcony, or above a flat roof across which there is access, the terminal MUST be fitted with a Tower Flue Components type K3 guard (or similar) such that the distance between the guard and the nearest part of the terminal is no less than 50mm.

8.2.7 Reference should be made to Table 3 for required terminal components and guard.

8.2.8 NOTE: TO ENSURE THAT RAINWATER CANNOT ENTER THE HEATER UNIT, THE FLUE MUST BE INSTALLED WITH A SLIGHT FALL AWAY FROM THE HEATER.

8.3 VERTICAL TERMINAL LOCATION

8.3.1 The ECONOMAIRE 50/INTEJAN is designed to be used with a vertical flue where the installation of a horizontal flue is either not possible or not desired.

8.3.2 Installation of a vertical flue can be on either a flat or pitched roof with a pitch angle of between 25˚ and 50˚.

8.3.3 The terminal MUST be positioned on the outside of the building and allow for the free passage of air across it at ALL times.

8.3.4 Avoid positions where the terminal is adjacent to projections; particularly under a balcony.

8.3.5 The terminal position must ensure that combustion products cannot enter the building in which the heater is installed (or any adjacent building) through windows, doors or by any other means.

8.3.6 Figure 3 shows recommended terminal positions.

8.3.7 Reference should be made to Table 3 for the required terminal components.

FIGURE 3
TERMINAL POSITIONS

TABLE 7	TERMINAL POSITION	MINIMUM DISTANCE
A	Directly below an opening, air brick, opening window etc	300mm
B	Above an opening, air brick, opening window, etc.	300mm
C	Horizontally to an opening, air brick, opening window etc.	300mm
D	Below gutters, soil pipes or drain pipes.	75mm
E	Below eaves.	200mm
F	Below balconies.	200mm
G	From a vertical drain pipe or soil pipe.	150mm
H	From an internal or external corner. Greater than 450mm protrusion.	300mm
I	Above ground, roof or balcony level.	300mm
J	From a surface facing the terminal.	600mm
K	From a terminal facing the terminal.	1,200mm
M	Vertically from a terminal on the same wall.	1,500mm
N	Horizontally from a terminal on the same wall.	300mm
Q	Above intersection with roof.	530mm
P	From a vertical structure on the roof	300mm
R	From the terminal to the boundary	300mm

TABLE 2
TERMINAL POSITIONS

FIGURE 4
HORIZONTAL FLUE OUTLET PROTRUSION

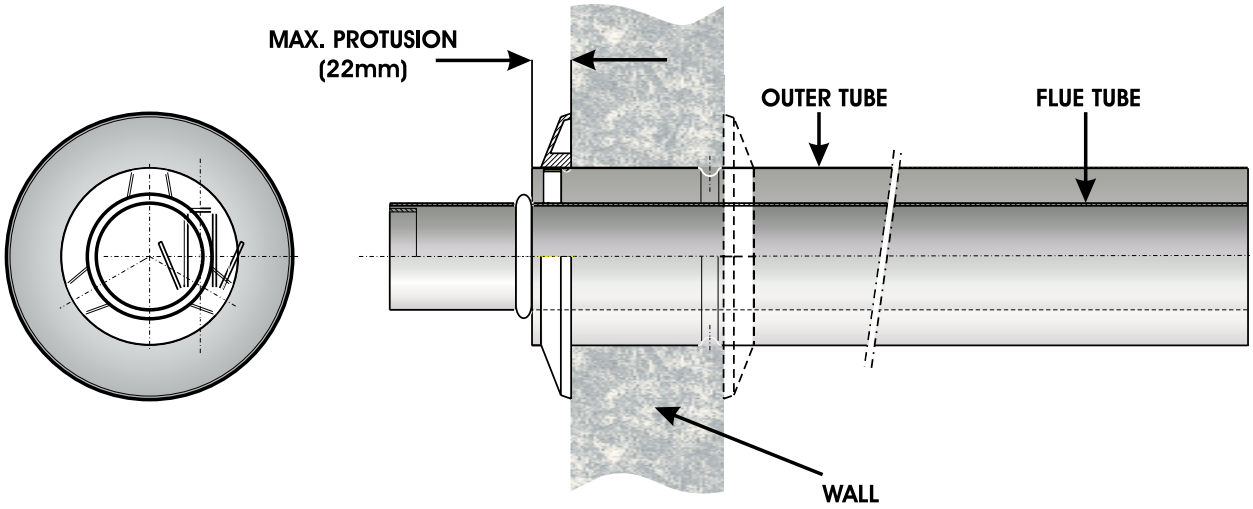

FIGURE 5
PLUME TERMINAL OUTLET DIMENSIONS

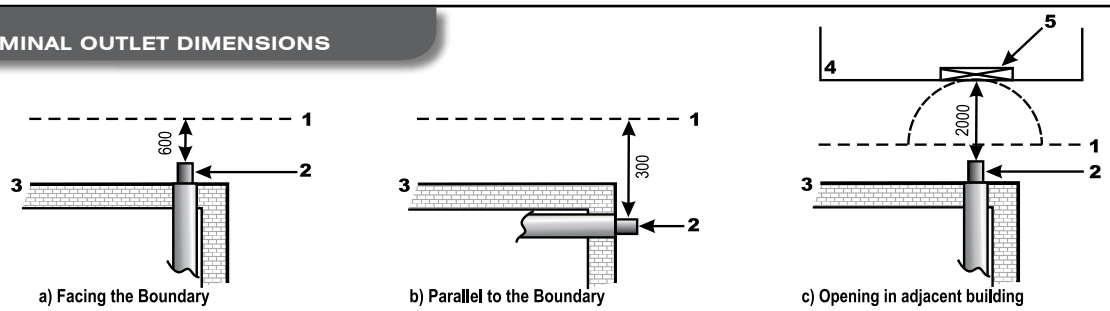

ITEM	DESCRIPTION	QTY	PART No.	COLOUR
1	90˚ Standard Flue Elbow	1	1000-0014840	White
2	45˚ Flue Elbow	1	1000-0014850	White
3	500mm Extension	1	1000-0014870	White
4	1000mm Extension	1	1000-0014860	White
5	Vertical Terminal & Support Bracket	1	1000-0014880	Anthracite
6	Vertical Terminal & Support Bracket	1	1000-0014980	Terrcotta
7	Lead Pitched Roof Flashing & Collar	1	1000-0014890	Anthracite
8	Lead Pitched Roof Flashing & Collar	1	1000-0014990	Terracotta
9	Aluminium Flat Roof Flashing	1	1000-0014900	Aluminium
10	Horizontal Wall Terminal	1	1000-0014910	White
11	Wall Plates (for above)	2	1000-0014920	n/a
12	Horizontal Wall Terminal & 2 x Wall Plates	1	1000-0014940	n/a
13	Condensate Drain	1	1000-0014940	White
14	Syphon Kit (for above)	1	1000-0014950	n/a
15	Condensate drain & 1 x Syphon Kit	1	1000-0014960	n/a
16	Wall Bracket (100mm diameter)	1	1000-0014970	n/a
17	Terminal Guard	1	1000-0015430	n/a

TABLE 3
FLUE & TERMINAL COMPONENTS

9. ELECTRICAL

WARNING: THIS APPLIANCE MUST BE EARTHED!

9.1 MAINS

9.1.1 The heater is supplied with mains cable (PVC sheathed, heat resisting to 85˚C), 3 core: Brown; Blue; Green/Yellow, 6A, 0.75mm^2), connected to a terminal block and exiting through the heater at the right hand top. The cable is suitable for a 230V 50Hz supply and requires connection to the fixed wiring using a double pole switched, fused spur with a contact separation of at least 3mm in ALL poles. The fuse fitted must be rated 5A to BS 1362. Connections must also be in accordance with the current edition of I.E.E Regulations BS 7671.

NOTE: If, for any reason, the heater is re-wired, then 3 core cable that meets the above specification MUST be used. Under NO circumstances, should 5 core cable be used for the combined purpose of supplying power to the heater and connecting the thermista-stat!

9.1.2 Fan delay and overheat (limit controls) are not adjustable and are factory set so that the limit switch opens at 93˚C and closes at 76˚C.

9.1.3. An electronic controller (thermista-stat) is supplied which acts like a room thermostat.

9.2 THERMISTA-STAT AND ITS LOCATION

9.2.1 The thermista-stat should be located where there is free air circulation and positioned approx. 1.5m (5ft) from the floor.

9.2.2 Avoid the following locations:

a. In a room where temperature is greatly affected by the sun or any other heat source, e.g. radiant fire, wall light fittings or TV set.

b. Near an outside door or windows, or on an outside wall.

c. Where it will be affected by warm air ducts, diffusers, waste pipes or the heater itself.

d. Where it will be subjected to vibration.

9.2.3 Connect the thermista-stat wires to terminals ‘8’ and ‘9’ on the terminal block (see Figures 15 & 16).

10. GAS *(See BS 5864 and BS 6891)*

10.1 The local gas supply conditions MUST be adequate for the specified burner pressures as stated in the technical data (Table 4)

10.2 An independent gas supply pipe from the meter is to be preferred wherever possible. Where this is not possible, the pipe must be capable of taking the complete input of the heater and all other gas appliances being served by the same pipe. This supply should be suitably sized to conform to British Standards requirements of no more than 1.0 mbar (0.4” wg) pressure drop (See table of discharge in BS 6891).

10.3 The ½” union gas cock (supplied) MUST be fitted to the gas inlet of the heater for easy isolation during servicing. The gas pipe should be fitted and installed so as to be durable, substantial and gas tight. To assist in determining where a gas connection may not be tight, a leak detection fluid should be applied around the connection. Under no circumstances should a flame be used to locate a gas leak. Gas entry to the air heater is through either side or the base, to a Rc½ (½” BSP. external [taper] thread).

NOTE: If the gas entry is through the right hand side of the heater, the supplied grommets MUST be used in order to ensure that the unit remains room sealed! Where the gas entry is through the base duct, the pipe route MUST be as shown in Figure 6 in order to avoid the high temperature in the area of the main burner and BOTH grommets used to ensure that the unit remains room sealed!

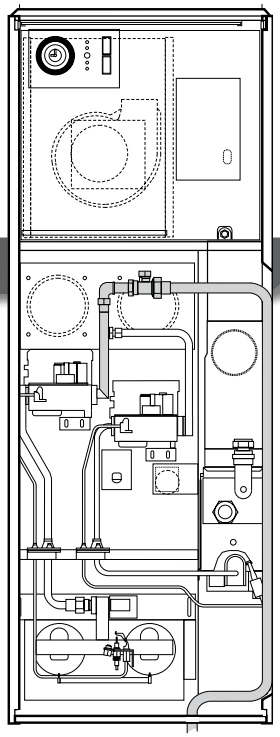

FIGURE 6
GAS ROUTE AVOIDING HIGH TEMPERATURE AROUND BURNER

11. AIR HEATER COMMISSIONING

11.1 PREPARATION

After installation of the appliance, you MUST do the following:

11.1.1 Test for gas leakage using proprietary detection fluid and seal any leaks found.

11.1.2 Carry out preliminary electrical system checks.

11.1.3 Ensure that:

a. filter, fan and fan compartments are free from obstructions.

b. all registers or grilles are open and conform to design specifications.

c. return, relief and ventilation air installations are adequate.

11.2 SYSTEM BALANCING

11.2.1 Set the air heater electrical supply **ON**.

11.2.2 Set the thermista-stat to the “SUMMER AIRFLOW” position.

11.2.3 Balance the system to provide the required volume proportions at the warm air outlets.

NOTE: If the system includes ceiling diffusers, the air through these should be NOT LESS THAN 1.5m/s (300ft/min), except for very small rooms, (i.e. bathrooms etc.). Outlet faces may require partial blanking in order to achieve this.

11.3 LIGHTING IGNITION AND MAIN BURNER

11.3.1 Turn on the gas supply to the heater.

11.3.2 Set both the “AIR HEATER” and “WATER HEATER” switches on the time control unit to the “OFF” position.

11.3.3 Set the thermista-stat to “9”.

11.3.4 Locate the status LED indicator which can be observed through the inspection hole in the bottom right hand corner of the control module.

11.3.5 Turn on the mains power supply to the heater.

11.3.6 Set the “AIR HEATER” switch on the time control to “CONT.” and observe the LED status indicator.

11.3.7 Whilst the control module runs through its diagnostic cycle the decimal point (DP) in the bottom right hand corner of the LED display will flash continuously.

11.3.8 The ignitor will spark for a maximum period of 60 seconds during which time the ignition and main burners SHOULD ignite and the igniter will stop.

11.3.9 When the control module reaches stage 5, (indicated by “5” on the LED) power is fed to the gas valve and the green LED “ON” light on the indicator panel will illuminate. After a period of approx. 5 seconds, the module will move on to stage 6 (indicated by “6” on the LED).

NOTE: Regardless of when the burner ignites during the 60 second period, the LED will continue to display stage 6.

11.3.10 If, after the 60 second period, the main burner has ignited the LED indicator will show “0” and the green LED “ON” light on the indicator panel will remain steady.

11.3.11 If the main burner fails to ignite, the red LED marked “LOCKOUT” will illuminate on the display panel and the LED status indicator will display an alphanumeric character relevant to the fault detected.

11.3.12 In the event of a lockout and the ignition and main burners failing to ignite, reference should be made to Table 6 in the fault finding section of these instructions in order to establish the fault condition.

11.3.13 Allow the air heater to operate for a minimum of 15 minutes to ensure stability.

11.3.14 Reset the thermista-stat to the desired comfort level.

11.3.15 Set the time control to the desired “on and “off” periods.

11.3.16 Set the “AIR HEATER” switch on the time control to “TIMED”.

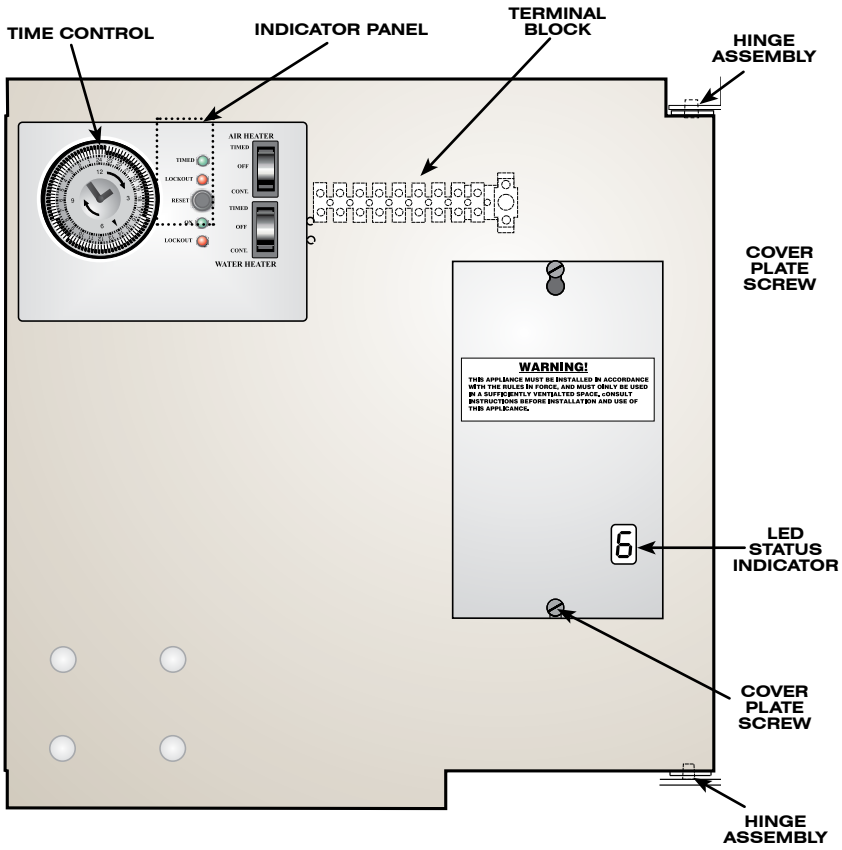

FIGURE 6
ELECTRICAL DOOR ASSEMBLY

FEATURES

1 Inlet Pressure Test Point
2 Outlet Pressure Test Point
3 Burner Pressure Adjuster

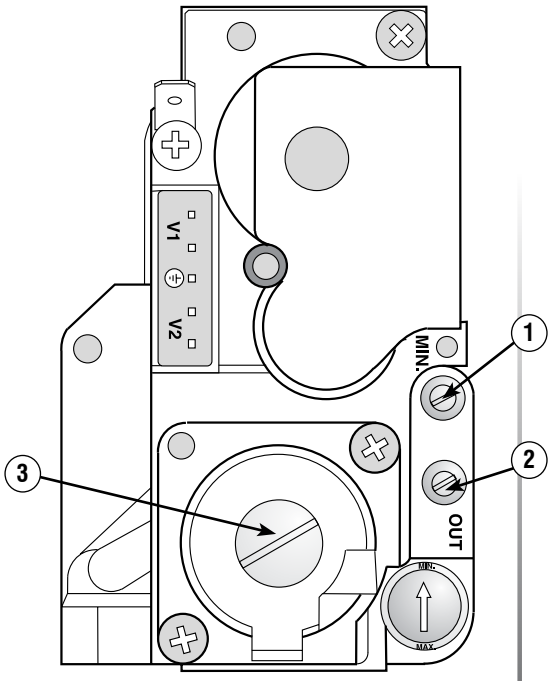

FIGURE 7
MULTIFUNCTIONAL CONTROL

11.4 MAIN BURNER PRESSURE TEST

NOTE: AIR HEATER BURNERS ARE FACTORY SET TO PROVIDE A NOMINAL HIGH RATE OUTPUT AS DETAILED IN TABLE 4

11.4.1 Loosen the screw on the outlet pressure test point and fit a pressure test gauge (see Figure 7)

11.4.2 Check the gauge reading against the information at Table 4.

11.4.3 If necessary, use the burner pressure adjuster to obtain required gauge reading in accordance with Table 4.

11.4.4 Remove the pressure gauge and re-tighten screw on the outlet pressure test point.

AIR HEATER	LOW RATE			HIGH RATE			WATER CIRCULATOR		
	kW	MJ/h	Btu/h	kW	MJ/h	Btu/h	kW	MJ/h	Btu/h
INPUT	15.8	56.7	53,802	19.5	70.2	66,500	4.86	17.5	16,600
OUTPUT	11.8	42.5	40,235	14.75	53.1	50,322	3.5	12.6	11,900
GAS RATE CV 1037 Btu/ft³	1.47m³/h (51.88ft³/h)			1.81m³/h (64.1ft³/h)			0.458m³/h (16.2ft³/h)		
BURNER SETTING PRESSURE (HOT)	11.5mbar (4.6" wg)			17.5mbar (7.0" wg)			15.0mbar (6.0" wg)		
MAIN INJECTOR	BRAY 23/600						AMAL 187/001/400		

TABLE 4
MAIN BURNER PRESSURE SETTING

11.5 AUTOMATIC CONTROLS CHECK

11.5.1 Light the ignition and main burners as detailed in paragraph 11.3.

11.5.2 Allow the heater to operate for 15 minutes to ensure stability.

11.5.3 After a short period, ensure that the fan increases to full speed.

11.5.4 When the temperature reaches the control setting, check that the main burner cycles ON and OFF at intervals of approximately 75 to 120 seconds.

REMINDER: At all times of commissioning, complete all the relevant sections of the Benchmark Checklist located on the inside back pages of this document prior to handing over the appliance to the occupier.

benchmark
COLLECTIVE MARK
THE MARK OF QUALITY FOR THE INSTALLATION, COMMISSIONING AND SERVICING OF DOMESTIC HEATING AND HOT WATER SYSTEMS

11.6 SAFETY CHECK

In order to check the correct operation of the control module, run the heater for a short period and introduce a fault condition by carrying out the following sequence:

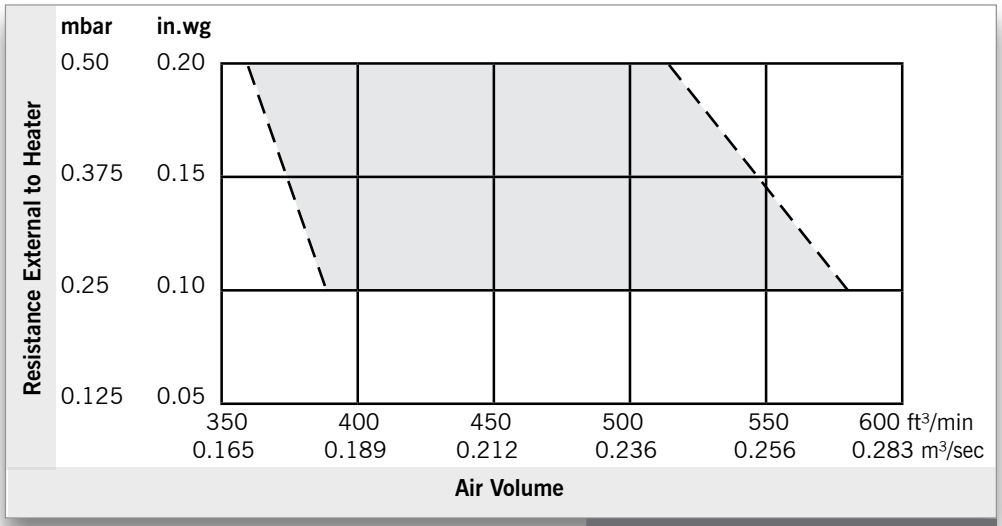

TABLE 5
FAN PERFORMANCE CURVE

11.6.1 Check for gas soundness within the appliance.

11.6.2 Turn on both the gas and electrical supplies to the heater.

11.6.3 Set the "AIR HEATER" switch on the time control unit to "CONT".

11.6.4 Light the ignition and main burners as described in paragraph 11.3

11.6.5 Allow the heater to run for a period of 5 minutes to stabilise.

11.6.6 Turn off gas supply to heater at the heater Gas Cock. DO NOT TURN OFF AT GAS METER!

11.6.7 Having detected the fault condition, the module should cause the red LED on the indicator panel to flash and the module will go through the ignition sequence. Having detected the fault condition a second time, the control module should cause the heater to go into lockout, indicated by a constant red LED and the LED status indicator will show "6".

11.6.8 Reinstate gas supply and wait for a minimum period of 10 seconds.

11.6.9 Depress the "RESET" button on the Indicator Panel.

11.6.10 The heater will go through its ignition procedure and the ignition and main burners SHOULD ignite.

11.6.11 Set the "AIR HEATER" switch on the time control unit to "TIMED"

12. INTEJAN CIRCULATOR

12.1 WATER CIRCULATION SYSTEM

Detailed recommendations for the water circulation system are given in BS 6798, BS 5449 (for small bore and microbore central heating systems), and BS 5446. The maximum water side operating pressure (PMS) is 1bar.

12.1.1 To ensure good circulation in gravity circuits, flow pipes should be designed to run vertically from the water heater before running laterally. Any lateral run should be less than 2 x the previous vertical run. Pipework should be installed with a rise towards the vent point. In systems with poor circulation, a pump kit is also available.

12.1.2 Drain cocks must be located in accessible positions that permit the draining of the whole system, including the appliance and hot water storage vessel. A drain cock should be fitted at the lowest point of the water heating circuit and, in the case of an indirect system, another must be fitted at the lowest point of the cold feed. Drain cocks should be at least ½" nominal size and be in accordance with BS 2879.

12.1.3 Economy valves can only be used in a DIRECT installation.

NOTE: The circulator thermostat is factory set to provide a temperature range of 50˚C to 82˚C. The temperature is increased by rotating the theromostat knob clockwise and temperature stop 2 MUST be left in position (see Figure 9) if the circulator is used in a direct application, ensuring a maximum temperature of 60˚C. For indirect applications, remove temperature stop 2.

In order to ensure that soundness of the heater is maintained, you MUST ensure that flow and return pipes into the sealed compartment are sealed with the supplied grommets!

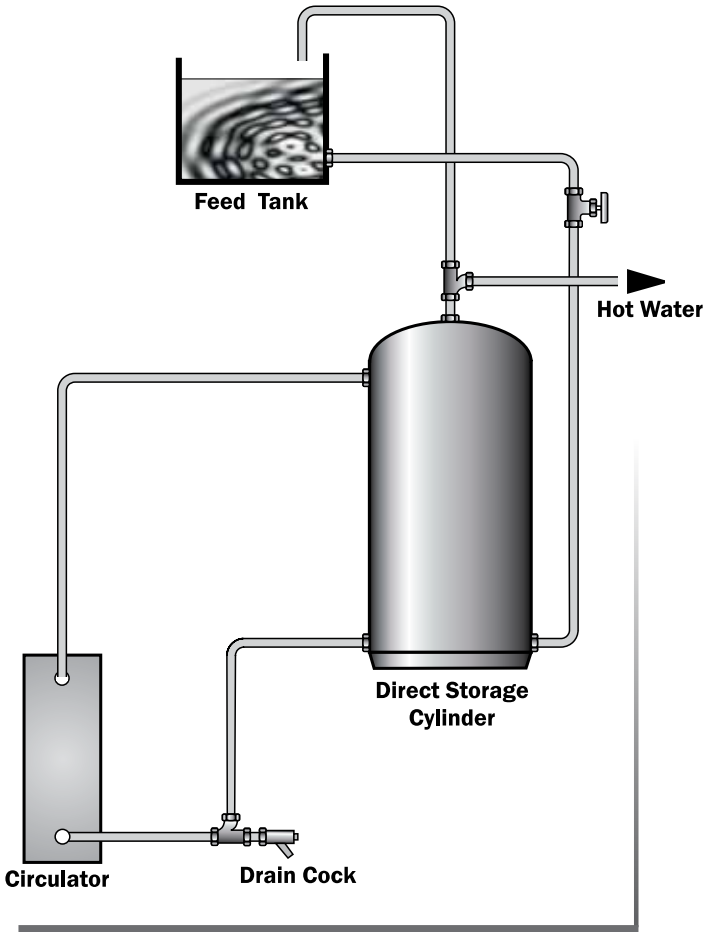

FIGURE 8
TYPICAL INTEJAN DIRECT SYSTEM APPLICATION

12.2 WATER CONNECTIONS

NOTE: Both flow and return connections are Rp¾ (¾ in BSP female) connections.

IMPORTANT: Use compression fittings at the appliance flow and return connections and at the air heater casing exit, to facilitate easy access to the circulator body.

12.2.1 Remove the fixing screws holding the sealing panel in place.

12.2.2 Carefully remove the sealing panel, such that access can be gained to the circulator compartment.

12.2.3 Side Exit

Knockouts/holes are provided in both sides of the heater cabinet for external pipe routing. Horizontal pipe runs are to be kept to an absolute minimum.

12.2.4 Top Exit

a) Remove the plastic plugs from the air heater top panel and the fan chamber floor.

b) Pass the flow and return pipes (flow pipe to the rear) from below and then locate the pipes with the circulator body connections. Fully tighten the connections to the main body before completing the connections to the top ends of the Flow and Return pipes, ensuring that the pipework does not restrict access to the circulator thermostat phial pocket or the air heater heat exchanger access panel.

NOTE: In order to maintain an air tight seal, the supplied grommets MUST be used where the flow and return pipes pass through the upper sealing plate and diaphragm.

IMPORTANT: Ensure that the fittings on the circulator body are well supported when making flow and return connections.

12.2.5 Using grommets or good quality duct tape, seal around the Flow and Return pipes where they pass through the air heater top panel and fan chamber floor.

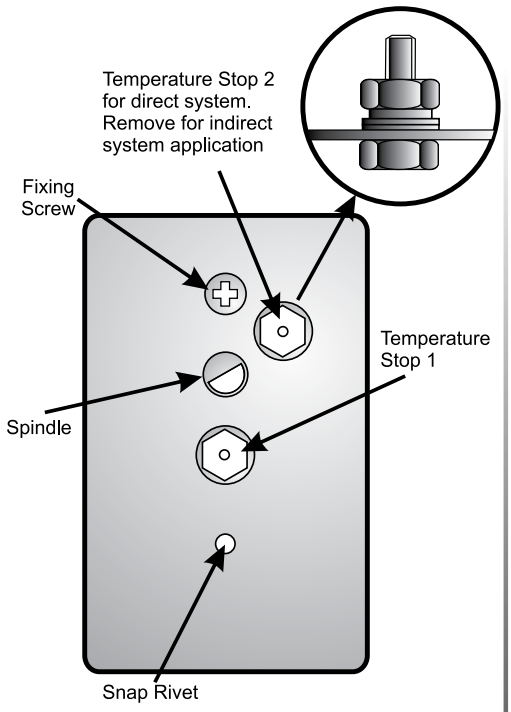

FIGURE 9
POSITION OF TEMPERATURE STOPS

13. INTEJAN CIRCULATOR COMMISSIONING

13.1 PREPARATION

13.1.1 Ensure that the gas and electrical supplies are **OFF**.

13.1.2 Fill the water circulation system, clear any air locks and check for water soundness, sealing any leaks detected.

13.1.3 Refit the sealing panel and secure using the 15 x fixing screws.

NOTE: Whilst the sealing panel needs to be fixed in such a manner so as to ensure an air tight seal, care MUST be taken not to over tighten the fixing screws.

13.2 LIGHTING IGNITION AND MAIN BURNERS

13.2.1 Turn on the gas supply to the heater.

13.2.2 Set both the "AIR HEATER" and "WATER HEATER" switches on the time control unit to the "OFF" position.

13.2.3 Set the thermostat so that it reaches the maximum stop.

13.2.4 Locate the LED status indicator which can be observed through the inspection hole located in the bottom right hand corner of the control module.

13.2.5 Turn on the mains power supply to the heater

13.2.6 Set the "WATER HEATER" switch on the time control to "CONT." and observe the LED status indicator.

13.2.7 Whilst the control module runs through its diagnostic cycle the decimal point (DP) in the bottom right hand corner of the LED display will flash continuously.

13.2.8 The ignitor will spark for a maximum period of 60 seconds during which time the ignition burner and main burner SHOULD ignite and the igniter will stop.

13.2.9 When the control module reaches stage 8, (indicated by "8" on the LED) power is fed to the gas valve and the green LED "ON" light on the indicator panel will illuminate. After a period of approximately 5 seconds, the module will move on to stage 9 (indicated by "9" on the LED).

NOTE: Regardless of when the burner ignites during the 60 second period, the LED will continue to display stage 9.

13.2.10 If, after the 60 second period, the main burner has ignited the LED indicator will show "0" and the green LED "ON" light on the indicator panel will remain steady.

13.2.11 If the main burner fails to ignite, the red LED marked "LOCKOUT" will illuminate on the display panel and the LED status indicator will display an alphanumeric character relevant the the fault detected.

13.2.12 In the event of a lockout and the ignition and main burners failing to ignite, reference should be made to Table 6 in the fault finding section of these instructions in order to establish the fault condition.

13.2.13 Test for gas leakage at the supply, multifunctional control, ignition burner and main burner using proprietary detection fluid, sealing any leaks found.

13.2.14 Allow the circulator to operate for a minimum of 15 minutes to ensure stability.

13.2.15 Reset the thermostat to the desired water temperature.

12.2.16 Set the time control to the desired "on" and "off" periods.

13.2.17 Set the "WATER HEATER" switch on the time control to "TIMED".

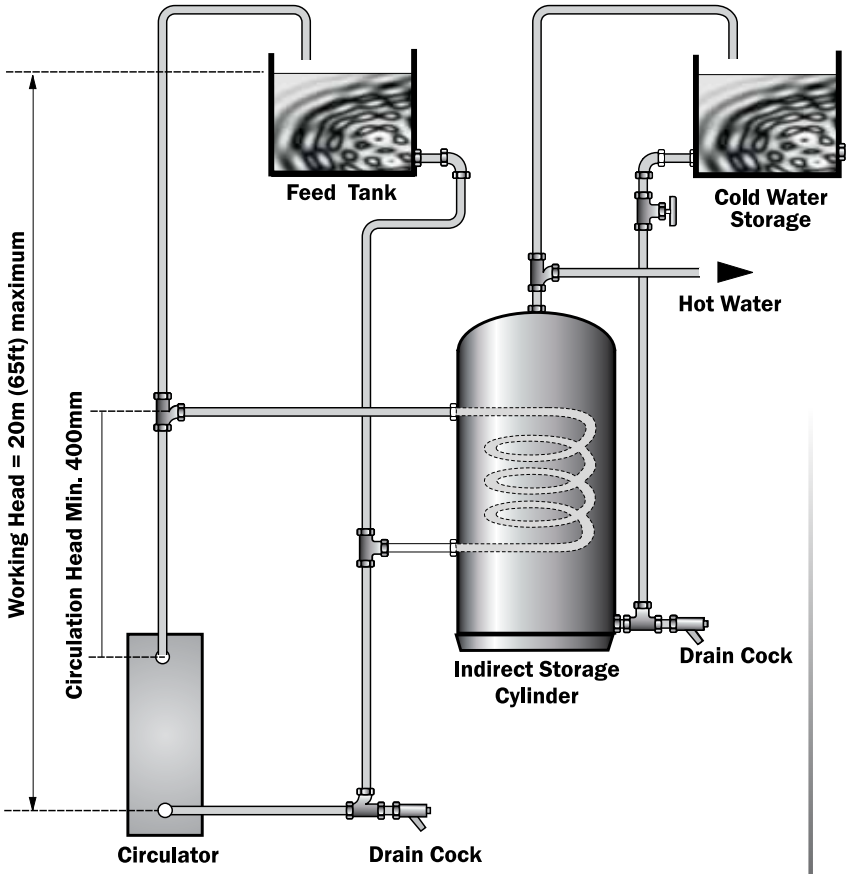

FIGURE 10
TYPICAL INTEJAN INDIRECT SYSTEM APPLICATION

13.3 WATER BURNER PRESSURE TEST

NOTE: THE WATER CIRCULATOR BURNERS ARE PRE-SET AND SHOULD NOT REQUIRE ADJUSTING.

13.3.1 Loosen the screw on the outlet pressure test point and fit a pressure test gauge (see Figure 7)

13.3.2 Check the gauge reading against the information at Table 4.

13.3.3 If necessary, use the burner pressure adjuster to obtain the required gauge reading as shown at Table 4.

13.3.4 Remove the pressure gauge and re-tighten the screw on the outlet pressure test point.

13.4 SAFETY CHECKS

13.4.1 Check for gas soundness within the appliance.

13.4.2 Check for water soundness around circulator and ALL joints.

13.4.3 Turn on both the gas and electrical supplies to the heater.

13.4.4 Set the “WATER HEATER” switch on the time control unit to “CONT”.

13.4.5 Light the ignition and main burners as described in paragraph 13.2

13.4.6 Allow the circulator to operate for a period of 5 minutes to stabilise.

13.4.7 Turn off gas supply to heater at the heater gas cock. DO NOT TURN OFF AT GAS METER!

13.4.8 The circulator SHOULD automatically go into “LOCKOUT” indicated by the red LED on the indicator panel and the LED status indicator will show “H”

13.4.9 Reinstate gas supply and wait for a minimum period of 10 seconds.

13.4.10 Depress the “RESET” button on the indicator panel.

13.4.11 The heater will go through its ignition procedure and the ignition and main burners SHOULD ignite.

13.4.12 Set the “WATER HEATER” switch on the time control unit to “TIMED”

14. INSTRUCTIONS FOR USERS

14.1 If the building is unoccupied, ensure that the user instructions are left taped to the air heater for the the user’s reference and that the installation instructions are left at or near the air heater for use on future service calls.

14.2 If the building is occupied, hand the user instructions over and ensure that the user understands:

14.2.1 How to light both the air heater and water circulator.

14.2.2 How to re-set the air heater or water circulator if “LOCKOUT” occurs.

14.2.3 How to operate the time control, thermista-stat and the SUMMER AIRFLOW switch.

14.2.4 That the time control must be reset following a power failure.

14.2.5 How to use the circulator thermostat to set the water temperature.

14.2.6 How to turn off the heater and switch off the electrical supply to the heater.

14.2.7 How to remove, clean and refit the air filter and at what intervals, (i.e. fortnightly, or weekly for new houses).

14.2.8 How to control the heating system by opening and closing warm air outlets.

14.2.9 How to obtain summer air circulation.

14.2.10 That the air grilles on the heater or heater compartment; grilles and ventilators in the walls, windows or doors of the building **MUST NOT BE OBSTRUCTED**.

14.2.11 That the heater must be serviced at least once a year by a competent person to ensure efficient and safe operation.

14.2.12 That the red instructions for safe use have been pointed out and understood.

14.2.13 That expert help must be obtained if persistent “LOCKOUT” occurs.

15. MAINTENANCE

NOTE: It is recommended that this appliance be serviced at intervals of no less than 12 months.

IMPORTANT: Ensure that the gas and electricity supplies are isolated before commencing any maintenance or replacement of components. Because the appliance is room sealed, it is also imperative that if at any stage of repairs the gasket on the sealing plate is damaged it MUST be replaced! After completion of any maintenance, always test for gas soundness and carry out a complete functional test of the appliance in accordance with the Commissioning Instructions at paragraphs 11.1 to 11.6 inclusive.

15.1 ROUTINE MAINTENANCE

15.1.1 Operate the appliance and check for the correct function of the burner and controls.

15.1.2 Turn OFF the gas and electrical supplies to the appliance.

15.1.3 Remove the air heater front panel.

15.1.4 Remove the water circulator flue hood and ensure that the heat exchanger is free of deposits and/or debris.

15.1.5 Remove and check the return air filter/cleaner for cleanliness, remove and clean the air circulation fan as detailed in paragraph 15.6.

15.1.6 Remove the burner and controls assembly as detailed in paragraph 15.2, inspect and clean the main burner and injector as necessary. Examine the main burner for cracks, including hairline cracks, exchanging the burner as necessary.

15.1.7 Inspect and clear the ignition burner orifice.

15.1.8 Clean the heat exchanger flueways by thoroughly brushing from above and below.

15.1.9 By viewing through the fan aperture, and using a torch or similar, examine the heat exchanger externally for signs of cracks or holes, particularly around welded joints.

15.1.10 Using a torch or similar, introduce a light source into the heat exchanger burner aperture and upper access port, and again examine the heat exchanger for signs of cracks or holes, particularly around welded joints, whilst again viewing through the fan aperture.

15.1.11 Refit the air circulation fan, burner and controls assembly, and air filter/air cleaner.

15.1.12 Allow the air heater to operate for approximately 15 minutes to ensure stability and, with the main burner lit, ensure that the operation of the air circulation fan does not affect the main burner flame profile.

15.1.13 Locate the flue gas test point (see figure 1) and attach a flue gas analyser to the test point in accordance with the manufacturer's instructions.

NOTE: The CO/CO_2 ratio should be no greater than 0.008

15.1.14 Fully commission the appliance in accordance with paragraphs 11 and 13.

NOTE: The flue gas test MUST NOT be used as an alternative to servicing the heater!

15.2 MULTIFUNCTION CONTROL AND AIR HEATER/WATER CIRCULATOR BURNER ASSEMBLY REMOVAL:

NOTE: Both the air heater and water circulator burner assemblies, as well as their respective ignition burner assemblies, MUST be removed as a complete unit together with their respective multifunction control.

PROCEDURE

15.2.1 Ensure that the gas and electrical supplies are switched OFF.

15.2.2 Remove the front door from the heater.

15.2.3 Remove the fixing screws that hold the sealing panel in place and carefully remove the panel.

15.2.4 Disconnect the electronic module from the relevant multifunction control by removing the securing bolt and sliding it towards the left of the heater unit, taking care not to cause damage.

15.2.5 Disconnect the gas supply to the water circulator multifunction control at the flared connection on the top of the gas supply feed.

15.2.6 Remove the relevant burner assembly fixing screws.

15.2.7 Whilst supporting the assembly, carefully remove the fixing screws securing the multifunction control.

15.2.8 Carefully remove the complete assembly, by sliding the sealing grommet out of the bulkhead, taking care not to cause damage to the grommet!

15.2.9 Refitting the burner assembly is a reverse procedure of the above instructions.

15.3 BURNER ASSEMBLY CLEANING

15.3.1 Remove the burner assembly as detailed above.

15.3.2 Disconnect the ignition burner gas feed pipe from the ignition burner

15.3.3 Release the single screw, nut and washer securing the ignition burner to the main burner and remove the ignition burner.

15.3.4 Release the 2 screws, nuts and washers securing the main burner to the mounting bracket and remove the main burner.

15.3.5 Clean the burner thoroughly both inside and out with a soft brush. **DO NOT ENLARGE, DISTORT OR DAMAGE BURNER HOLES.**

15.3.6 Reassemble in reverse order.

15.4. IGNITION BURNER AND ELECTRODE REMOVAL AND REPLACEMENT

15.4.1 Remove the burner as detailed in paragraph 15.2 above.

15.4.2 Disconnect the igniter lead from electrode.

15.4.3 Break the gas feed at the burner end of the gas feed pipe.

15.4.4 Release the single screw, nut and washer securing the ignition burner to the main burner assembly and carefully remove the ignition burner assembly.

15.4.5 Release the electrode securing nut from the ignition burner assembly and withdraw the electrode.

15.4.6 Release the ignition burner feed pipe securing nut from the ignition burner assembly and withdraw the feed pipe and injector from the ignition burner assembly. Disconnect the ignition burner injector from the ignition burner feed pipe hook.

15.4.7 Release the 2 x 5mm screws securing the ignition burner bracket to the ignition burner mounting bracket and remove the ignition burner bracket.

15.4.8 Refitting or replacement is in reverse order.

NOTE: If, at any time, the gas supply feed pipe is removed from the multifunction control, the 'O' ring MUST be replaced.

15.5 AIR CIRCULATING FAN - REMOVAL AND CLEANING

15.5.1 Ensure that the electrical supply is isolated.

15.5.2 Remove the front door from the heater and remove the 3 x fixing screws on the electrical door assembly.

15.5.3 Open the door assembly outwards on its hinges (see Figure 6) such that access is gained to the rear of the assembly.

15.5.4 Disconnect the fan flying leads from the fan assembly.

15.5.5 Release the fan assembly securing screw and withdraw the fan assembly from the heater cabinet, avoiding damage to the fan blades.

15.5.6 Remove all dust from both the impeller and motor, taking care to not disturb the balance of the fan.

15.5.7 Refitting or replacement is in reverse order.

15.6 CONTROL MODULE REMOVAL

15.6.1 Ensure that the electrical supply is isolated.

15.6.2 Remove the front door from the heater.

15.6.3 Loosen the top and bottom screws holding the electrical cover plate in place on the electrical door assembly. (see figure 6)

DO NOT COMPLETELY REMOVE THE SCREWS AT THIS STAGE.

15.6.4 Remove the cover plate by sliding it upwards, such that it exposes the control module.

15.6.5 Carefully disconnect the module by lifting the connecting blocks off the circuit board (see Figure 11)

NOTE: There is no need to loosen any of the connection screws on the connector blocks!

15.6.6 Completely remove the top and bottom cover plate screws and pull the control module free of the electrical door assembly.

15.6.7 Fit the new control module in place and partially fit the cover plate fixing screws.

DO NOT TIGHTEN SCREWS AT THIS STAGE!

15.6.8 Re-connect the module by carefully pushing the connector blocks onto the circuit board.

15.6.9 Re-fit the electrical cover plate and tighten the cover plate screws.

15.6.10 Re-establish electrical supply.

15.6.11 Commission air heater and water circulator as described in the relevant sections above.

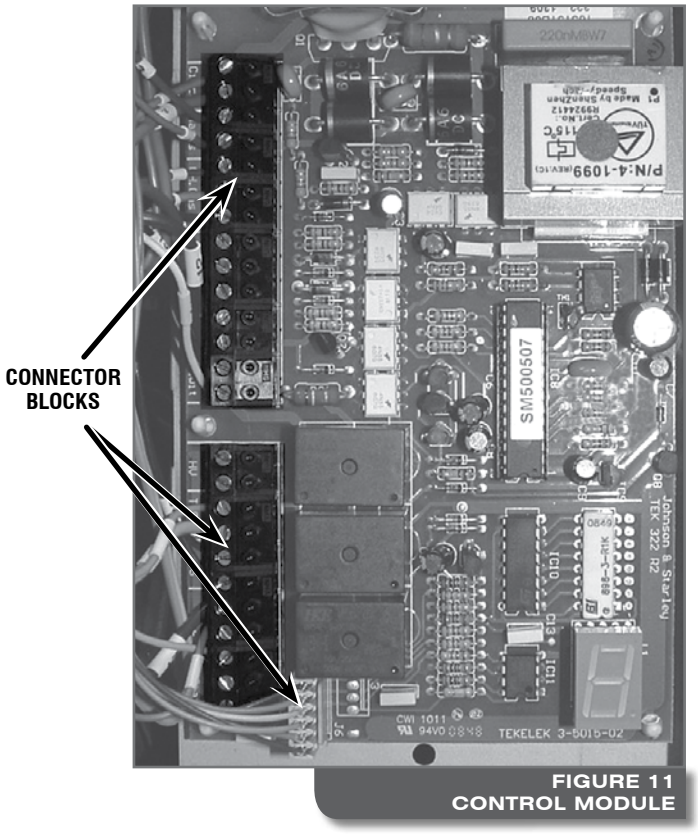

FIGURE 11
CONTROL MODULE

NOTE: To disconnect the module, LIFT the connector blocks off the circuit board. DO NOT remove the wires from the connector blocks!

15.7 TIME CONTROL, SWITCH AND LED INDICATOR (DAUGHTER BOARD) REMOVAL

Preparation

15.7.1 Ensure that the electrical supply is isolated.

15.7.2 Remove the appliance front door and release the 3 x securing screws on the electrical door assembly.

15.7.3 Open the door assembly outwards on its hinges (see Figure 6) such that access is gained to the rear of the assembly.

Time Control Removal

15.7.3 Disconnect spade terminal connectors **"C1", "C2", "C3"** and **"C5"** from the time control.

15.7.4 Release the 3 x fixing screws securing the clock mounting plate to the electrical door and withdraw the total assembly from the door.

15.7.5 Remove the 3 x M3 bolts that secure the time clock mechanism and remove from the mounting plate.

15.7.6 Refitting or replacement is in reverse order.

LED Indicator (Daughter Board)

15.7.7 Disconnect the daughter board by unplugging the flylead from the control module board.

15.7.8 Release the 3 x fixing screws securing the clock mounting plate to the electrical door and withdraw the total assembly from the door.

15.7.9 Remove the 2 x M3 nuts holding the board onto the bolts and remove.

15.7.10 Replacement is in reverse order, ensuring to refit the spacers.

Switch/s Removal

15.7.11 Disconnect the spade terminal connectors **"S1", "S2"** and **"S3"** or **"S4", "S5"** and **"S6"** from the switch terminals.

15.8.12 Release the switch/s by pressing out from the back of the electrical door assembly. 15.7.13 Fit new switch/s and lock into position by pressing home until the locking tabs locate on the top and bottom of the switch.

15.7.14 Re-connect the spade connectors.

15.7.15 Re-fitting of the electrical door assembly is in reverse order.

15.7.16 Close the electrical door assembly and secure using the 3 x fixing screws.

15.7.17 Set the time control to correct time.

15.7.18 Set the time control to the required "ON" and "OFF" periods.

15.8 FAN DELAY CONTROL/LIMIT SWITCH REMOVAL

15.8.1 Ensure that the electrical supply is isolated.

15.8.2 Remove the appliance front door.

15.8.3 Remove the 2 x screws holding the sealing panel in place and carefully remove the panel.

15.8.4 Disconnect the wires from the terminal block and release the clamping bush, in order to remove the wiring harness.

15.8.5 Refitting or replacement is in reverse order.

15.9 WATER CIRCULATOR THERMOSTAT REMOVAL

15.9.1 Remove the appliance front door.

15.9.2 Disconnect the spade terminals on the overheat limit switch and withdraw the harness through the grommet.

15.9.3 Disconnect the two spade terminals from the back of the thermostat, located underneath the bulkhead.

15.9.4 Carefully loosen the control knob from the shaft of the thermostat using a large flat head screwdriver and remove.

15.9.5 Remove the retaining plug and withdraw the thermostat phial from the dry pocket on the water flow pipe, taking care not to cause damage to the capillary tube!

15.9.6 Loosen and remove the 2 x screws securing the thermostat and remove the thermostat from the bulkhead.

15.9.7 Refitting or replacement is in reverse order.

15.10 HEAT EXCHANGER ACCESS

15.10.1 Ensure that the gas and electrical supplies are isolated.

15.10.2 Remove the appliance front door.

15.10.3 Remove the fixing screws holding the sealing panel in place and carefully remove the panel.

15.10.4 Remove the burner assembly as detailed at paragraph 15.2.

15.10.5 Remove the multifunctional control for the water circulator (IF FITTED)

15.10.6 Release the screws securing the top access cover plate and withdraw the cover plate and gasket.

15.10.7 Release the screws securing the heat exchanger top sealing plate and withdraw the sealing plate and gasket.

15.10.8 Reassembly is in reverse order.

NOTE: When reassembling ensure that gaskets are soundly sealed and replaced where necessary (See cautionary note at paragraph 15) Prior to use, you MUST fully commission the heater in accordance with these instructions.

15.11 FLUE FAN, REMOVAL AND CLEANING

15.11.1 Remove the air circulation fan as detailed at 10.6

15.11.2 Carefully remove the feed pipes to the pressure switch TAKING CARE TO NOTE THEIR POSITION.

15.11.3 Carefully open the plastic insulators on the fan fly-lead and break the electrical connections such that the spade connectors can be fed through the grommet on the sealing plate..

15.11.4 Remove the fixing screws holding the flue fan sealing plate in place and remove the plate.

15.11.5 Release the 4 x fixing screws holding the flue fan in place

15.11.6 Carefully withdraw the fan and its gasket from the collector box, taking care not to damage the fan blades.

15.11.7 Remove all dust from both the impeller and motor, taking care not to disturb the balance of the fan.

15.11.8 Refitting/replacement is in reverse order.

IMPORTANT: If, for any reason, the air pressure tubes are removed from the combustion air fan, the brass air flow restrictors MUST be removed from the old tube and fitted in the new tubing at the fan end!

16. DEFECT DIAGNOSIS

IMPORTANT: If an electrical defect occurs after installation of the appliance; preliminary earth continuity, polarity, and resistance to earth checks should be carried out with a multimeter. On completion of any maintenance/fault-finding task that has required the breaking and remaking of electrical connections, then checks of continuity, polarity, and resistance to earth must be repeated.

16.1 The following table shows the LED status indicator display and the corresponding fault condition, along with the lockout type. It should be noted that under certain conditions the red LED relating to the air heater may flash. This is part of the control sequence and the module should reset automatically. It is ONLY necessary to press the "RESET" button if the red LED is continually illuminated !

NOTE: When the air heater and water circulator are used in combination, the status indications for the water circulator will override those for the air heater; therefore LED displays "8" and "9" will override "5" and "6". For this reason, it is strongly recommended that the air heater and water circulator be commissioned independently of each other.

FAULT FINDING

LED	CYCLE	FAULT CONDITION	LOCKOUT TYPE
0	Running	None - all is well	NONE
1	Air Proving	Air switch closed	ABSOLUTE
2	Air Proving	Gas valve relay ON (either)	ABSOLUTE
3	Air Proving	Air switch Closure failure	ABSOLUTE
4	Prove Heater Valve	Gas valve current, relay should be open	AIR HEATER
5	Prove Heater Valve	None (wait for ignition burner)	AIR HEATER
6	Prove Heater Valve	Flame failure	AIR HEATER
7	Prove Circulator Valve	Gas valve current, relay should open	CIRCULATOR
8	Prove Circulator Valve	None (wait for ignition burner)	CIRCULATOR
9	Prove Circulator Valve	Flame failure	CIRCULATOR
A	Running	Excessive cabinet temperature	CIRCULATOR
C	Running	Air flow senor our of range	ABSOLUTE
E	Running	Problem with air circulator fan	AIR HEATER
F	Running	Air heater limit stat	AIR HEATER
H	Running	Circulator limit stat	CIRCULATOR
L	Running	Open air flow sensor	AIR HEATER
U	Running	Main spikes detected	AIR HEATER

TABLE 6
FAULT FINDING

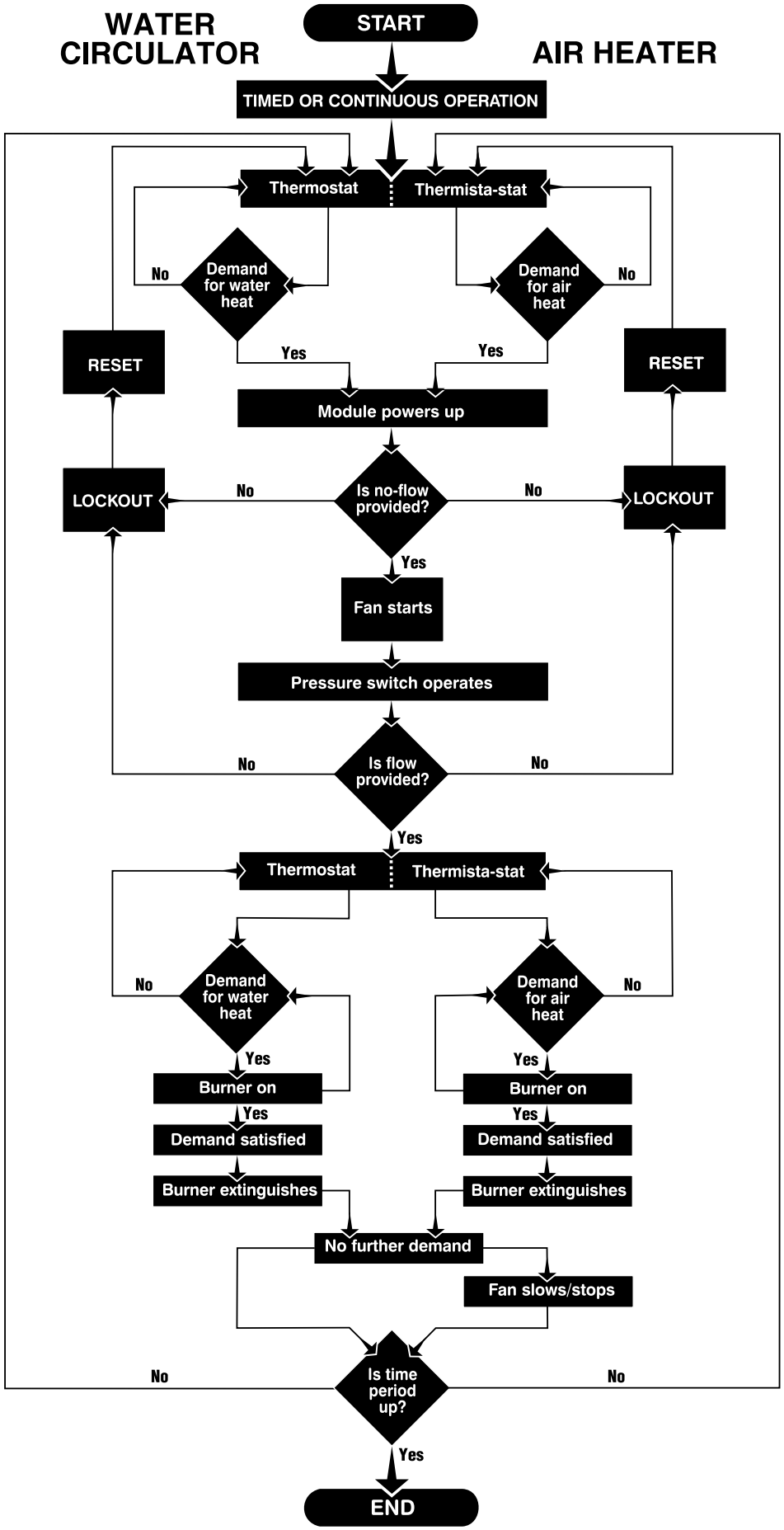

FIGURE 13
CONTROL FLOWCHART

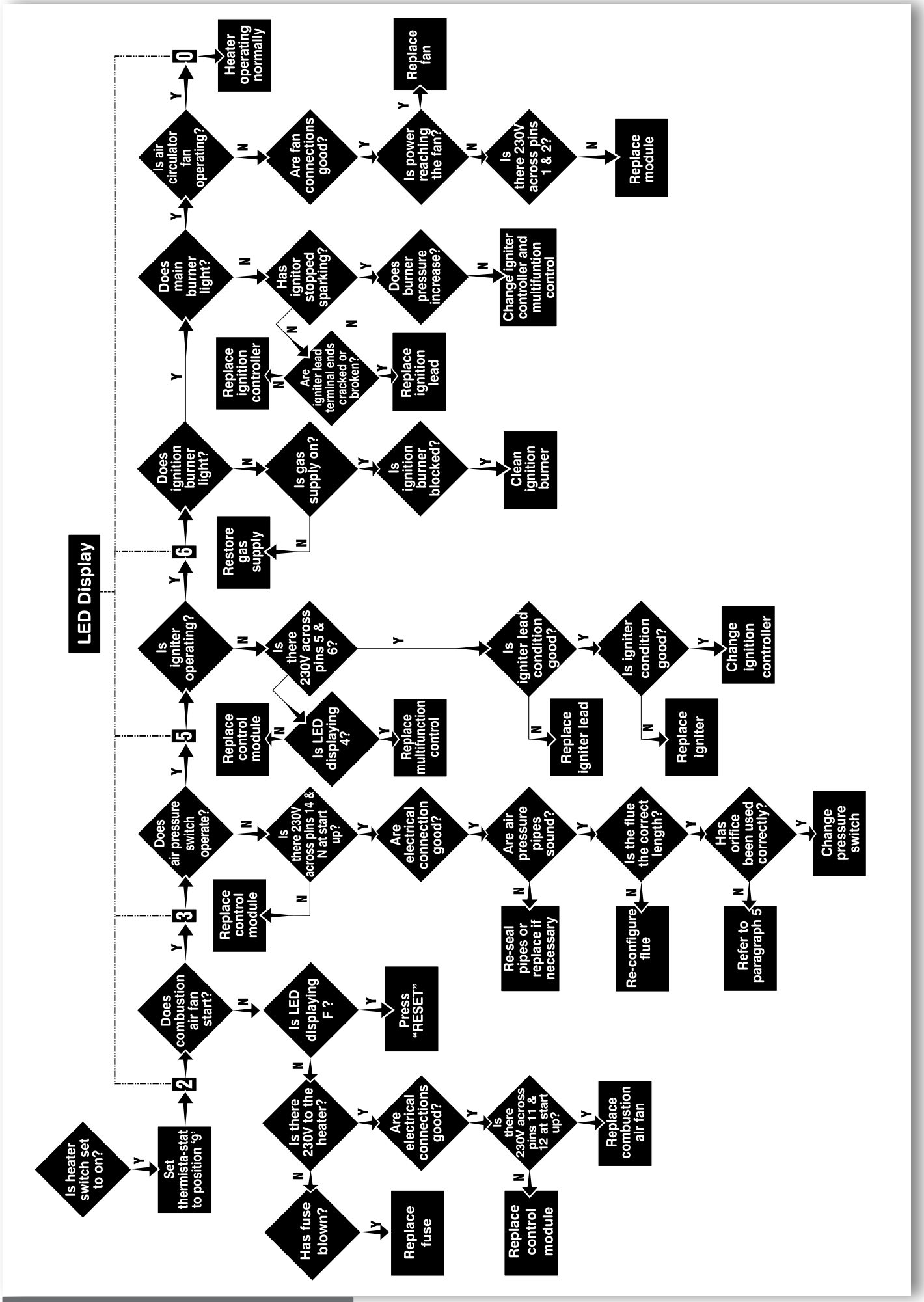

FIGURE 13
AIR HEATER DIAGNOSIS FLOWCHART

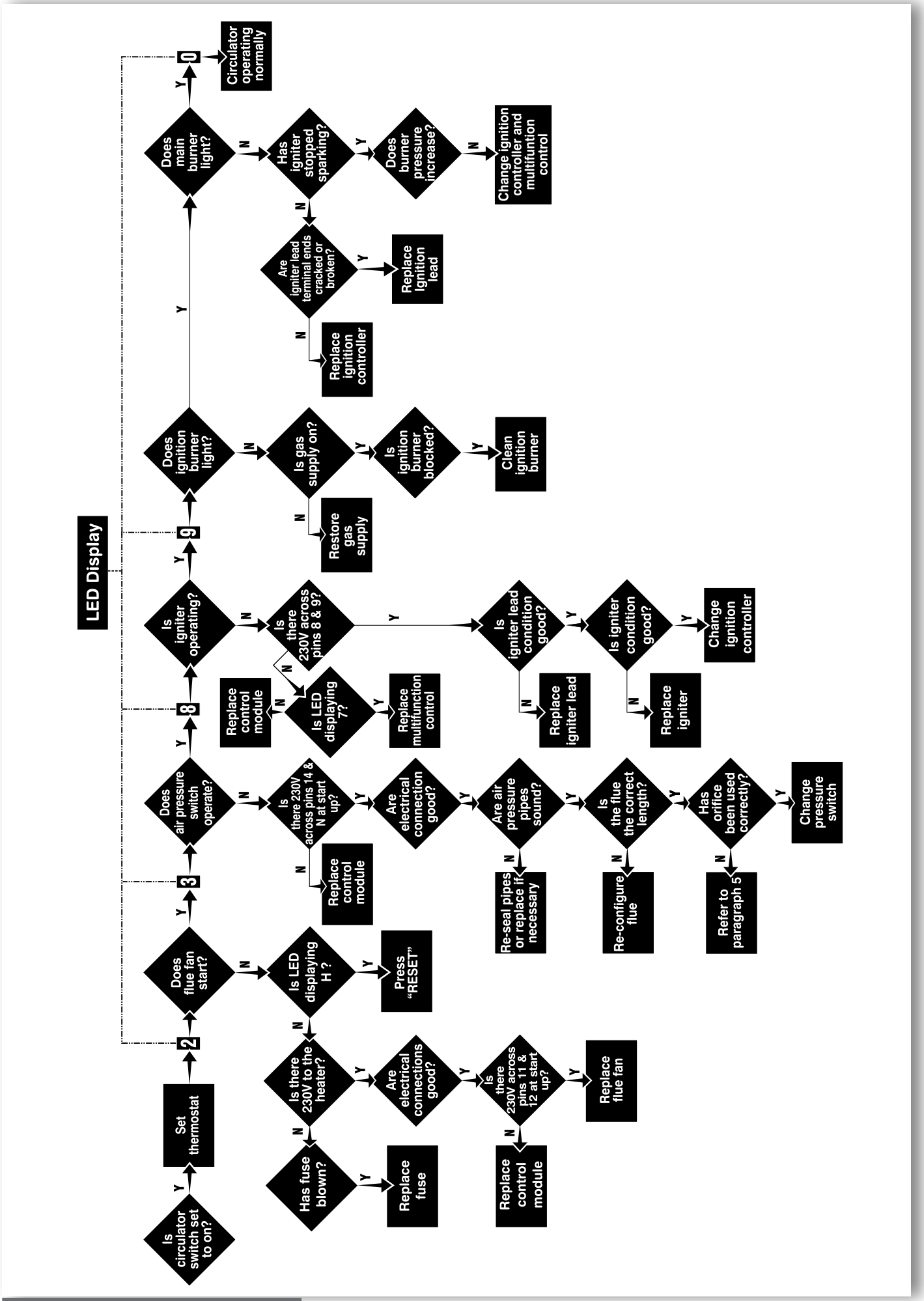

FIGURE 14
CONTROL FLOWCHART

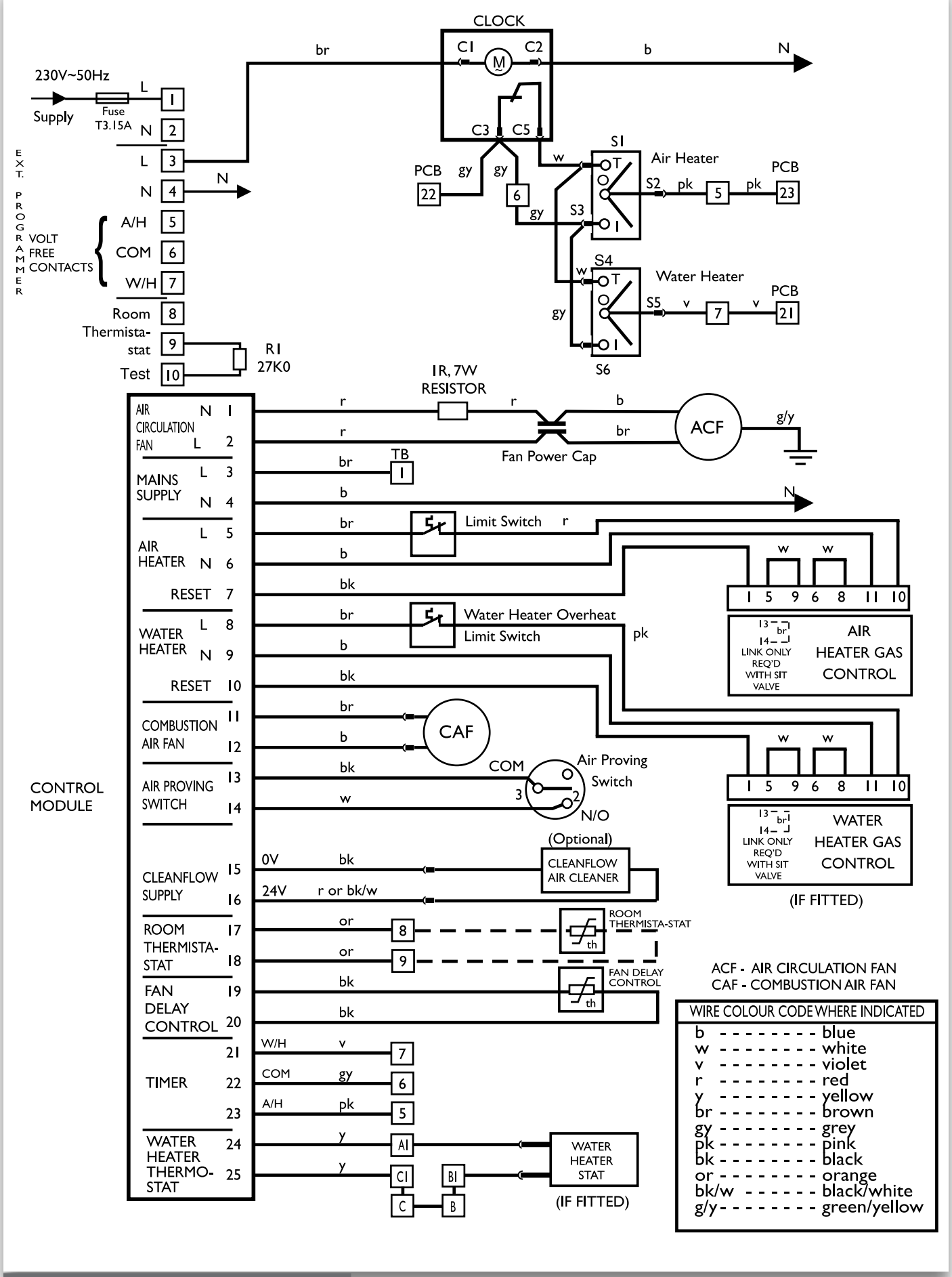

FIGURE 15
LOGIC DIAGRAM

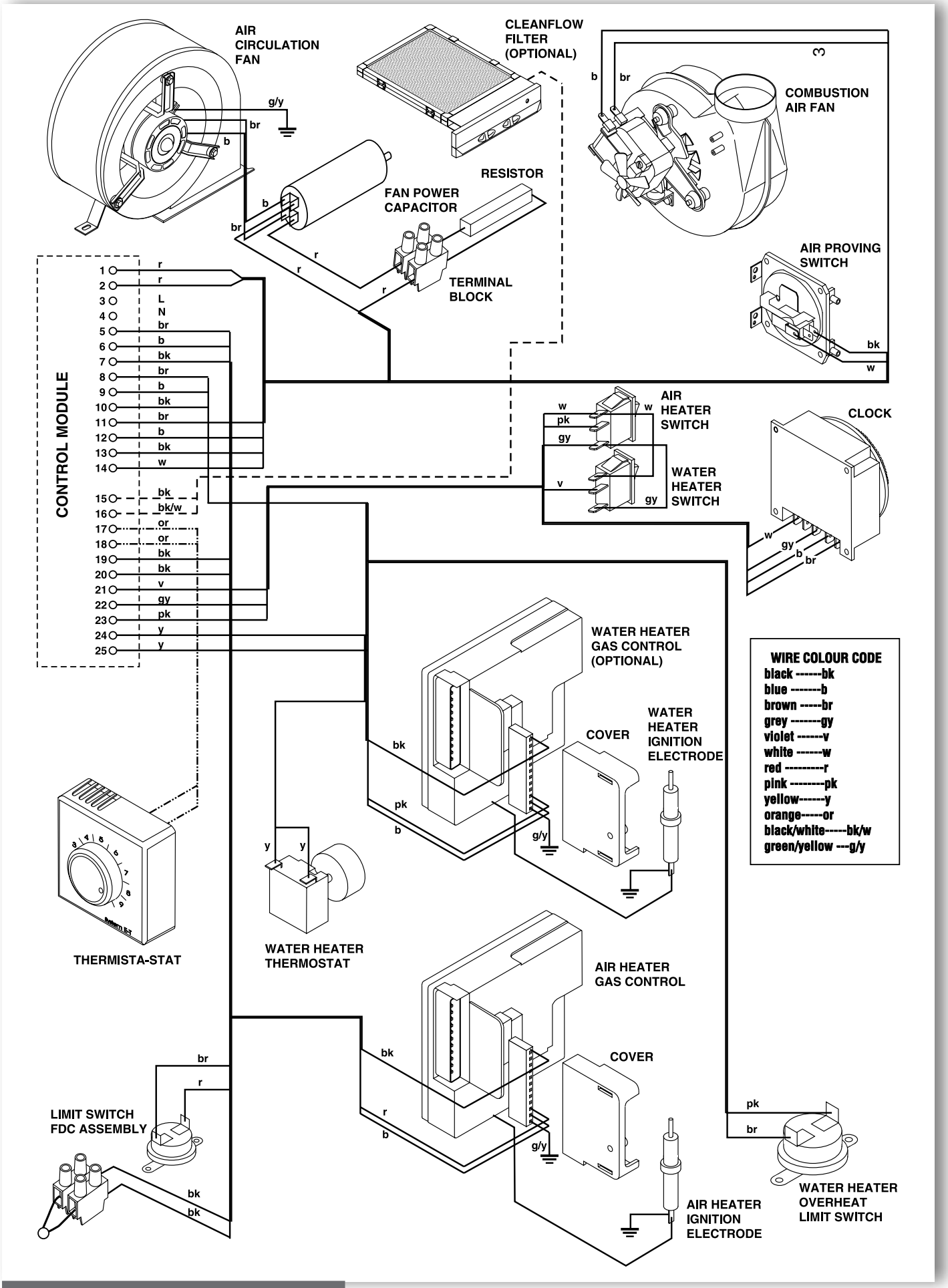

FIGURE 16
SCHEMATIC DIAGRAM

Showing connections of an external controller

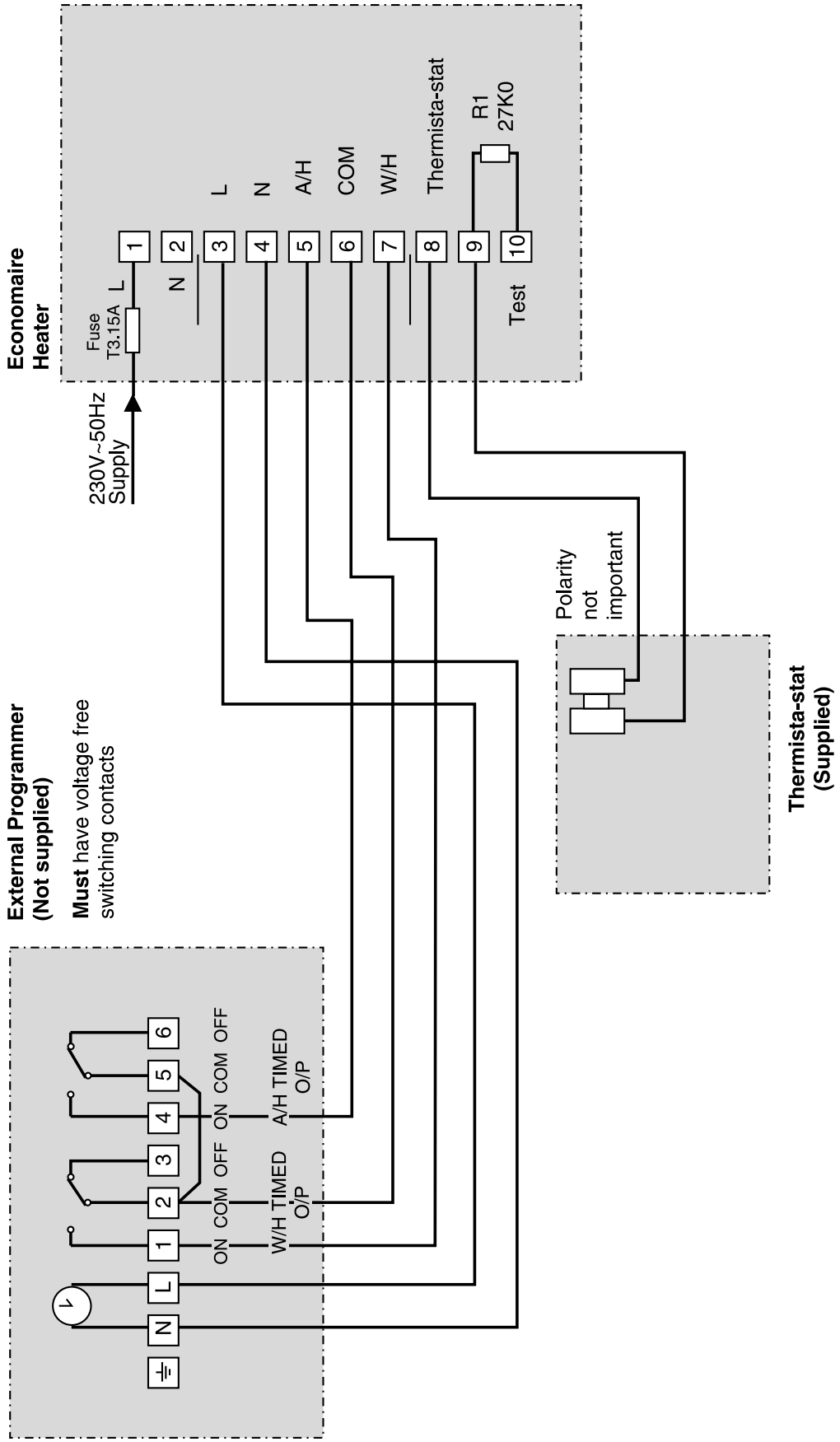

FIGURE 17
CIRCUIT DIAGRAM

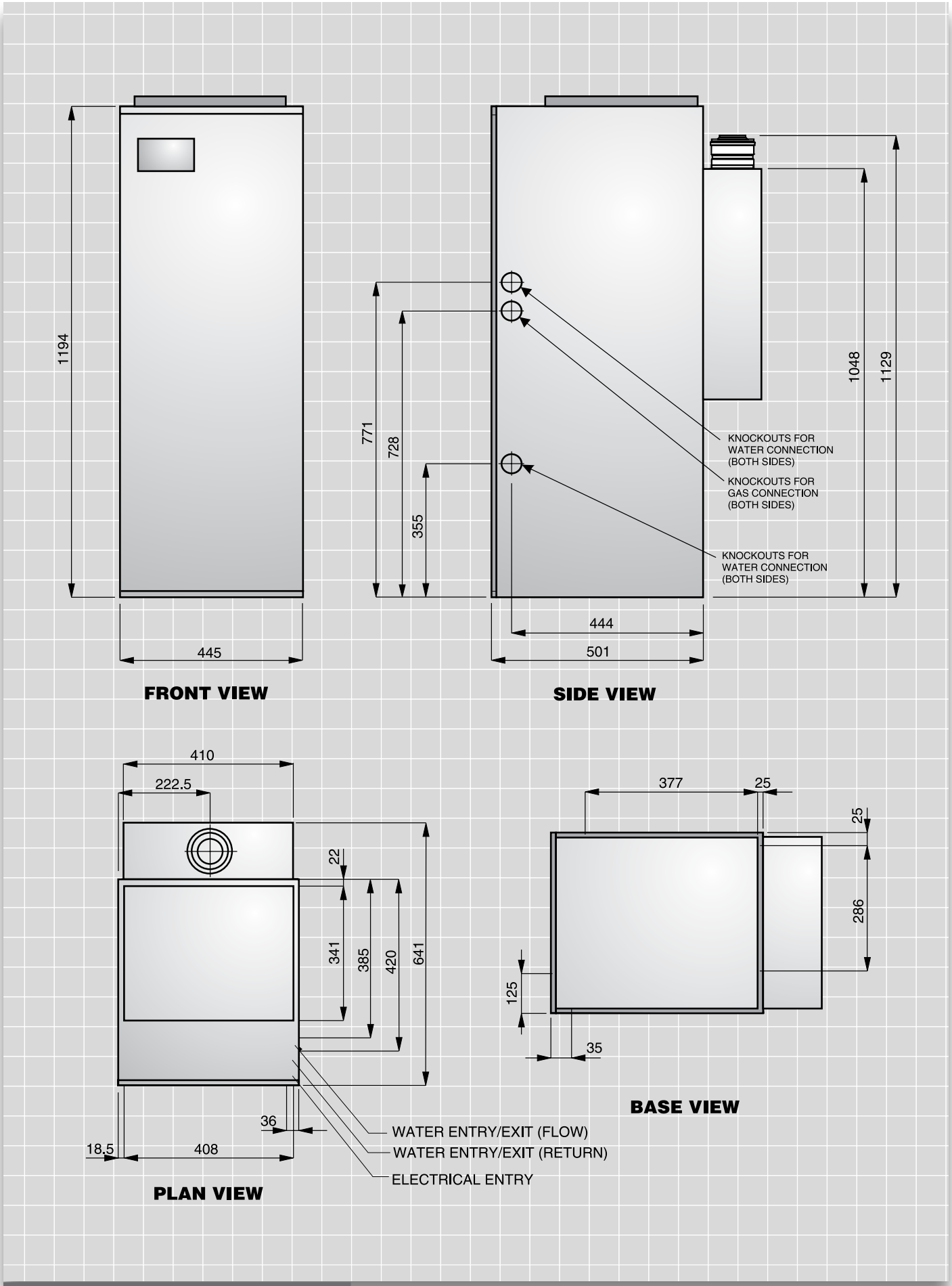

FIGURE 18
DIMENSIONS

	ITEM	G.C. No.	PART No.	DESCRIPTION	QTY
ECONOMAIRE 50	1	E80119	1000-0521860	Wiring Harness (Air Heater)	1
	2	E69625	1000-0521010	Wiring Harness (Control Panel)	1
	3	E80182	N500-0300005	Heat Exchanger	1
	4	E80183	1000-0521820	FDC & Limit Switch	1
	5	E84173	N500-0182000	Filter Assembly	1
	6	E84174	N500-0702000	Burner & Control Assembly	1
			1000-0705280	Burner & Cross Lighter Assembly	1
	7	398351	1000-0700980	Main Burner Injector (Bray 23/600)	2
	8	244880	B0S 02397/1	Ignition Burner Assembly	1
	9	E84220	1000-0522160	Air Pressure Switch	1
	10	E69632	1000-0520830	Clock Mechanism	1
	11	E84221	1000-0708700	Ignition Burner Feed Pipe	1
	12	E80141	1000-0708510	Electric Flame Control Device (Honeywell)	1
	13	387819	1000-0708990	Igniter Lead	1
	14	E80146	1000-0708520	Multifunction Control	1
			400-0016-7-32	'O' Rings for above	1
	15	245 514	1000-0515620	Thermista-stat	1
	16	E82950	N500-0504005	Combustion Air Fan (SIFAN)	1
	17	E80185	N500-0500000	Complete Electrical Panel	1
	18	E80146	1000-0520850	Control Module	1
	18a	E69648	1000-0520880	Reset Panel (Daughter Board)	1
	19	245 509	1000-0513820	Fuse T3.15A (anti surge)	1
	20	245 538	1000-0504710	Capacitor 4μf	1
	21	E84232	N500-0157000	Cabinet Door Assembly	1
	22	382753	1000-0500725	Air Circulation Fan	1
	23	392935	1000-0701260	Ignition Burner Injector	1
	24	E69653	1000-1507310	Gasket	1
	25	E69709	1000-0000390	Air Pressure Tube	2
	26	E80151	1000-2501050	Grommet	1
	28	E69656	1000-0505540	Electronics Box (Cleanflow)	1
	29	792370	A0332 X0396	Cleanflow Filter Medium (pad)	2
	30	E84234	1000-0708690	Gas Feed Pipe	1
	31	E84235	1000-0708650	Gas Feed Pipe	1
	32			View Port Window (NOT AVAILABLE AS A SPARE)	2
INTEJAN WATER HEATER	33	244 876	S00284	Main Body Assembly (inc. baffle & spring clip)	1
	35	E80155	1000-0521870	Wiring Harness	1
	36	E69670	1000-0520920	Overheat Cut-Off Switch	1
	37	E84236	N500-0700000	Complete Burner Assembly	1
	38	E80143	1000-0708520	Multifunction Control	1
		E84219	400-0016-7-32	'O' Rings for above	2
	39	384615	BOS 00562	Burner Arm	1
	40	244880	BOS 02397/1	Ignition Burner	1
	41	H50495	S01482	Thermostat	1
	42	E80158	1000-0702090	Main Injector Nozzle (Amal 187/001/400)	1
	43	392935	1000-0701260	Ignition Burner Injector	1
	44	E80159	1000-0708990	Igniter Lead	1
	45	E84237	1000-0708670	Main Burner Gas Feed Pipe	1
	46	230328	1000-250070	Phial Retaining Plug	1
	47	E80141	1000-0708510	Electronic Flame Control Device (Honeywell)	1
	48	E84238	1000-0708710	Ignition Burner Feed Pipe	1
	49	E84250	1000-0708680	Gas Feed Pipe	1
	50	E80151	1000-2501050	Grommet	1

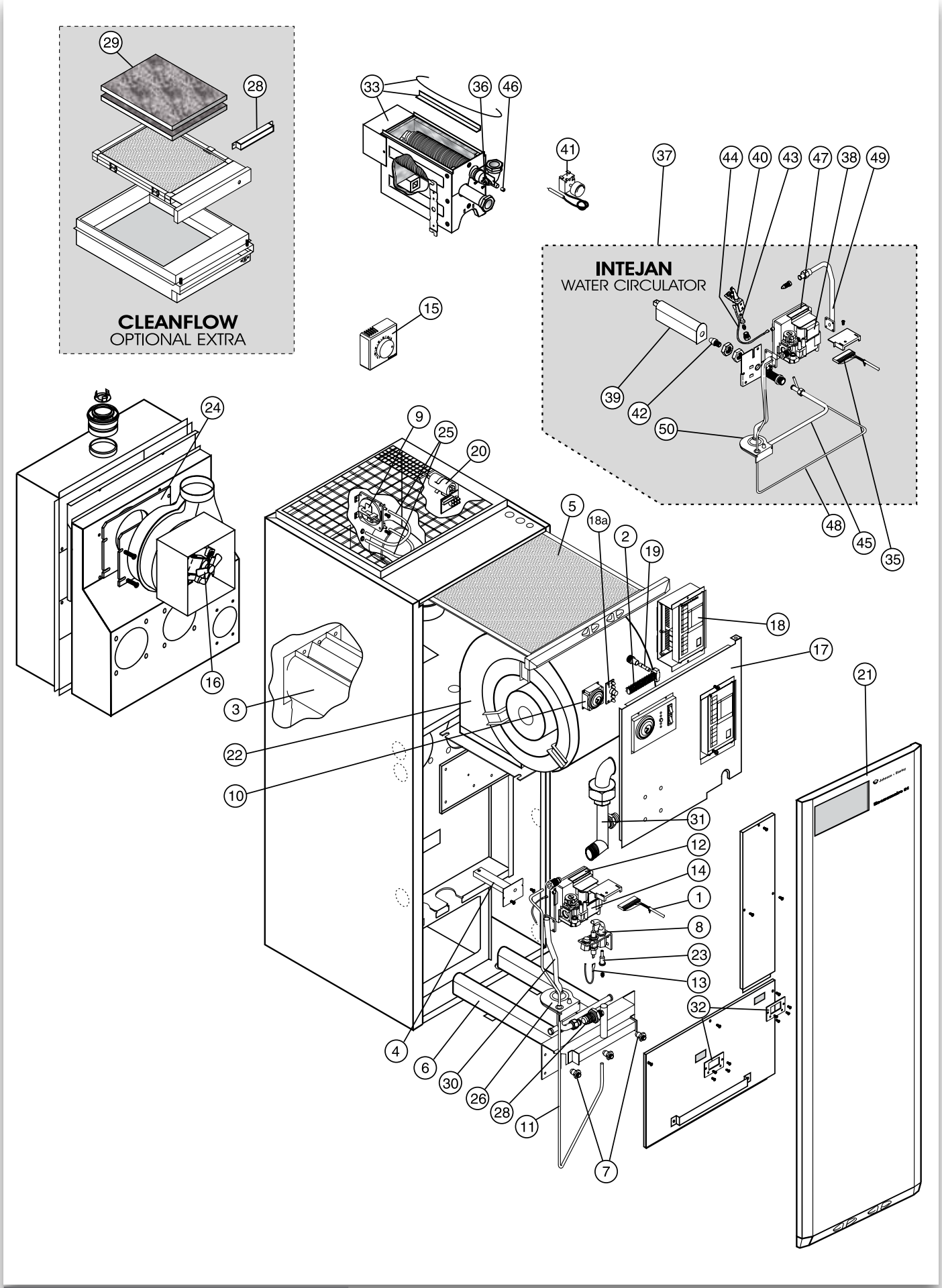

FIGURE 20
EXPLODED DIAGRAM

IMPORTANT INFORMATION

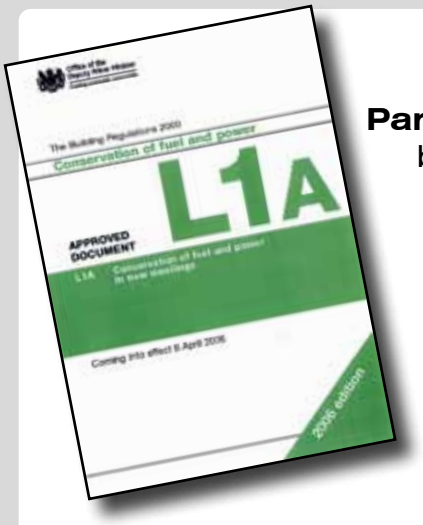

Warm Air Heating
Fully complies with
Part L of the Building Regulations
by following the guidance in the
British Standard BS 5864
and the
Heating Compliance Guide
For further information contact
Johnson & Starley
on Telephone: 01604 762881

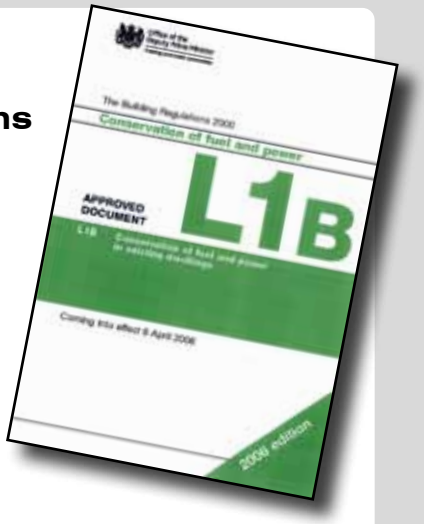

These kits are readily available from Johnson & Starley Ltd
Telephone the Sales Office for further information

ECONOMAIRE 50 ANCILLARY'S		
	Description	**Product Code**
1	Cleanflow Air Filter	**ECF50**
2	Return Air Plenums	**RAP50**
3	Side Return Air Kits	**SR50**
4	Return Air Kits	**RAK50**
5	Slot Fix Panels	**TS50/TSG50**
6	Top Closure panels	**TP50/TC50**
7	Base Duct	**WB50/WBX50**
8	Base Tray	**BT50**
9	Pump Kit (no pump)	**EKP1**
10	Pump Kit (with pump)	**EKP2**
INTEJAN 50FK WATER HEATER KIT ANCILLARY'S		
11	Flow Return Kit	**EFTA50**
12	Rear Riser	**ER50**
13	Top Closure Panel	**TP50R/TC50R**
12	Base Duct	**WBX50R**

ECONOMAIRE 50 LOG BOOK

WARM AIR HEATER AND WATER CIRCULATOR COMMISSIONING CHECKLIST

This Log Book should be filled out at each annual service

WARM AIR HEATER AND CIRCULATOR COMMISSIONING CHECKLIST

This Commissioning Checklist is to be completed in full by the competent person who commissioned the warm air unit and associated equipment as a means of demonstrating compliance with the appropriate Building Regulations and then handed to the customer to keep for future reference.

Failure to install and commission this equipment to the manufacturer's instructions may invalidate the warranty but does not affect statutory rights.

Customer Name

Address

Telephone Number

Warm Air Unit Make and Model

Warm Air Unit Serial Number

Commissioned by *(print name)*

Gas Safe Reg. No.

Company Name

Telephone No.

Company Address

Commissioning Date

To be completed by the customer on receipt of a Building Regulations Compliance Certificate*:

Building Regulations Notification Number *(if applicable)*

CONTROLS *Tick the appropriate boxes if applicable*

Time & Temperature Control to Heating	Room Thermostat & Programmer/Timer ☐	Programmable Roomstat ☐	Load/Weather Compensation ☐	Optimum Start Control ☐
Time & Temperature Control to Hot Water			Cylinder Thermostat & Programmer/Timer ☐	Warm Air Unit ☐
Heating Zone Valves			Fitted ☐	Not Required ☐
Hot Water Zone Valves			Fitted ☐	Not Required ☐
Thermostatic Radiator Valves			Fitted ☐	Not Required ☐
Automatic Bypass System			Fitted ☐	Not Required ☐
Warm Air Unit Interlock			Yes ☐ No ☐	If YES, Volume ☐ Litres

FOR WARM AIR HEATERS ONLY

Has the system been balanced in accordance with the heater manufacture's instructions?	Yes ☐	No ☐
Was an anemometer used?	Yes ☐	No ☐
Have balancing dampers been fitted?	Yes ☐	No ☐

FOR WARM AIR HEATING: MEASURE AND RECORD

Burner operating pressure	☐ mbar
Heat input	☐ kW
Temperature difference between return air inlet and nearest outlet	☐ °C

FOR HOT WATER GENERATORS: MEASURE AND RECORD

Burner operating pressure	☐ mbar
Heat input	☐ kW
Water flow temperature	☐ °C

ALL INSTALLATIONS

The heating and hot water system complies with the appropriate Building Regulations	Yes ☐
The system and associated products have been installed and commissioned in accordance with the manufacturer's instructions	Yes ☐
The efficient operation of system and its controls have been demonstrated to and understood by the customer	Yes ☐
The manufacturer's literature, including Benchmark Checklist and Service Record, has been explained and left with the customer	Yes ☐

Commissioning Engineer's Signature

Customer's Signature

(To confirm demonstration of equipment and receipt of appliance instructions)

* All installations in England and Wales must be notified to Local Authority Building Control (LABC) either directly or through a Competent Persons Scheme. A Building Regulations Compliance Certificate will then be issued to the customer.

benchmark
COLLECTIVE MARK
THE MARK OF QUALITY FOR THE INSTALLATION, COMMISSIONING AND SERVICING OF DOMESTIC HEATING AND HOT WATER SYSTEMS

Service Record

It is recommended that your heating system is serviced regularly and that the appropriate Service Interval Record is completed.

Service Provider
Before completing the appropriate Service Interval Record below, please ensure you have carried out the service as described in the manufacturer's instructions.

Always use the manufacturer's specified spare part when replacing controls.

Service 1 Date:
Engineer Name:
Company Name:
Telephone No.
Operative ID No.
Comments:

Signature:

Service 2 Date:
Engineer Name:
Company Name:
Telephone No.
Operative ID No.
Comments:

Signature:

Service 3 Date:
Engineer Name:
Company Name:
Telephone No.
Operative ID No.
Comments:

Signature:

Service 4 Date:
Engineer Name:
Company Name:
Telephone No.
Operative ID No.
Comments:

Signature:

Service 5 Date:
Engineer Name:
Company Name:
Telephone No.
Operative ID No.
Comments:

Signature:

Service 6 Date:
Engineer Name:
Company Name:
Telephone No.
Operative ID No.
Comments:

Signature:

Service 7 Date:
Engineer Name:
Company Name:
Telephone No.
Operative ID No.
Comments:

Signature:

Service 8 Date:
Engineer Name:
Company Name:
Telephone No.
Operative ID No.
Comments:

Signature:

Service 9 Date:
Engineer Name:
Company Name:
Telephone No.
Operative ID No.
Comments:

Signature:

Service 10 Date:
Engineer Name:
Company Name:
Telephone No.
Operative ID No.
Comments:

Signature:

Johnson & Starley are the leading UK & European manufacturers of a complete range of **Domestic Warm Air Heaters**.

All the heaters suit both **Replacement** and **Upgrade** needs and are compliant with the new (2006) amendments to Part L of the Building Regulations.

HOME COMFORT SOLUTIONS

Company Details

Website Address	**www.johnsonandstarley.co.uk**
Email	**sales@johnsonandstarley.co.uk**
	marketing@johnsonandstarley.co.uk
Telephone Number	**01604 762881** **(Main switchboard)**
Fax Number	**01604 767408**

Spares

Telephone	**01604 707012**
Fax	**01604 762884**

Sales

Telephone	**01604 707012**
Fax	**01604 764879**

Service

Telephone	**01604 707011**
Fax	**01604 707017**

Warm Air Upgrade Enquiry Service

Telephone	**01604 707026**
Fax	**01604 707017**

COMMERCIAL & INDUSTRIAL H&V SOLUTIONS

Johnson & Starley Dravo Division

Company Details

Johnson & Starley	Dravo Division Industrial H&V
Website Address	**www.dravo.co.uk**
Email	**dravo@johnsonandstarley.co.uk**
Telephone Number	**01604 707022**
Fax Number	**01604 706467**

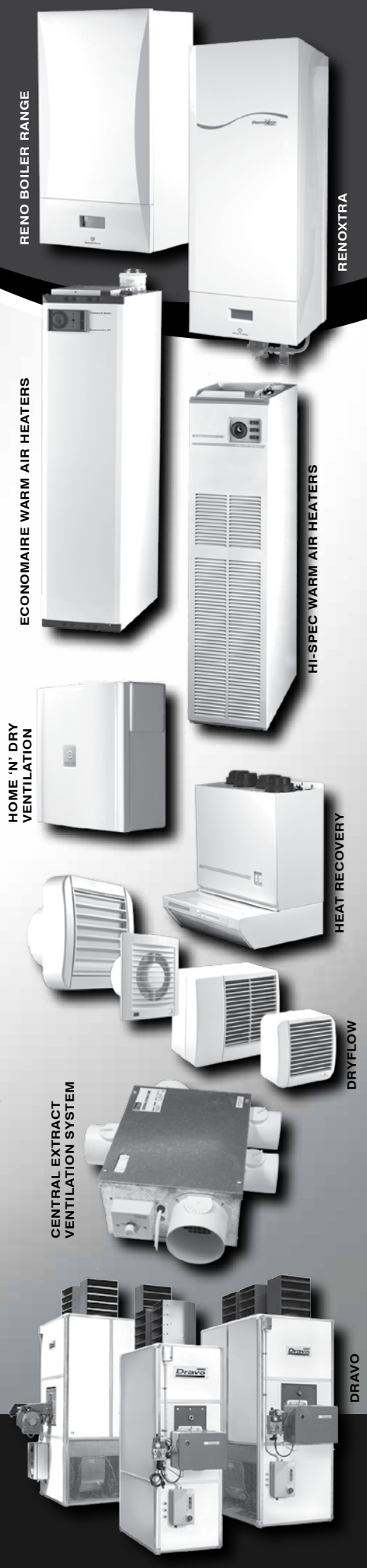

Rhosili Road, Brackmills, Northampton NN4 7LZ

In the interest of continuous development Johnson & Starley Ltd reserve the right to change specifications without prior notice.